This is a digital copy of a book that was preserved for generations on library shelves before it was carefully scanned by Google as part of a project to make the world's books discoverable online.

It has survived long enough for the copyright to expire and the book to enter the public domain. A public domain book is one that was never subject to copyright or whose legal copyright term has expired. Whether a book is in the public domain may vary country to country. Public domain books are our gateways to the past, representing a wealth of history, culture and knowledge that's often difficult to discover.

Marks, notations and other marginalia present in the original volume will appear in this file - a reminder of this book's long journey from the publisher to a library and finally to you.

Usage guidelines

Google is proud to partner with libraries to digitize public domain materials and make them widely accessible. Public domain books belong to the public and we are merely their custodians. Nevertheless, this work is expensive, so in order to keep providing this resource, we have taken steps to prevent abuse by commercial parties, including placing technical restrictions on automated querying.

We also ask that you:

+ *Make non-commercial use of the files* We designed Google Book Search for use by individuals, and we request that you use these files for personal, non-commercial purposes.
+ *Refrain from automated querying* Do not send automated queries of any sort to Google's system: If you are conducting research on machine translation, optical character recognition or other areas where access to a large amount of text is helpful, please contact us. We encourage the use of public domain materials for these purposes and may be able to help.
+ *Maintain attribution* The Google "watermark" you see on each file is essential for informing people about this project and helping them find additional materials through Google Book Search. Please do not remove it.
+ *Keep it legal* Whatever your use, remember that you are responsible for ensuring that what you are doing is legal. Do not assume that just because we believe a book is in the public domain for users in the United States, that the work is also in the public domain for users in other countries. Whether a book is still in copyright varies from country to country, and we can't offer guidance on whether any specific use of any specific book is allowed. Please do not assume that a book's appearance in Google Book Search means it can be used in any manner anywhere in the world. Copyright infringement liability can be quite severe.

About Google Book Search

Google's mission is to organize the world's information and to make it universally accessible and useful. Google Book Search helps readers discover the world's books while helping authors and publishers reach new audiences. You can search through the full text of this book on the web at `http://books.google.com/`

Library
of the
University of Wisconsin

WORKS OF

WILLIAM MAYO VENABLE

PUBLISHED BY

JOHN WILEY & SONS

Garbage Crematories in America.

8vo, x + 200 pages, 45 figures. Cloth, $2.00.

Methods and Devices for Bacterial Treatment of Sewage.

8vo. vi + 236 pages, 43 figures. Cloth, $3.00.

METHODS AND DEVICES

FOR

BACTERIAL TREATMENT OF SEWAGE

BY

WILLIAM MAYO VENABLE, M.S.
M. Am. Soc. C. E., Assoc. M. Am. Inst. Elec. Engrs.

FIRST EDITION
FIRST THOUSAND

NEW YORK
JOHN WILEY & SONS
LONDON: CHAPMAN & HALL, LIMITED
1908

COPYRIGHT, 1908,
BY
WILLIAM MAYO VENABLE, M.S.

Stanhope Press
F. H. GILSON COMPANY
BOSTON, U.S.A.

1588808

120809
JUL 9 1908

SXD
.V
.2

PREFACE

All of this work except the Introduction and Chapter II is devoted to Bacterial Sewage Purification regarded from the viewpoint of the Civil Engineer. The second chapter is given to reference works containing information upon sewage purification and kindred subjects, including bacterial and chemical analyses of polluted waters.

Chapters III to VIII, inclusive, discuss sewage purification in its various aspects, the several methods of treatment being considered in historical order but kept distinct in the presentation. The extensive use made of drawings of United States patents, both old and recent, will be found a valuable aid to the engineer and to the student.

Chapter IX consists of a summary of the known engineering principles involved in the subject under treatment, and a statement of the problems still unsolved. In considering the effect of capillary attraction in filter beds, the author has introduced certain laws which it is believed have not hitherto been sufficiently appreciated. The last two chapters are designed to illustrate the importance of the principles set forth, — Chapter X by reference to troubles in actual works, and Chapter XI by suggestive designs for small installations.

LIST OF ILLUSTRATIONS

	Page
Precipitation Tanks of G. W. Wigner, 1870	37
Precipitation Tanks of F. Hille, 1873	39
Precipitation Tanks of A. S. Glover, 1882	41
Sewage Strainer of B. F. Woods, 1883	42
Air-cleaned Strainer of George E. Waring, 1895	43
Intermittent Strainer of A. S. Glover, 1896	45
Cameron Septic Tank, 1899	59
Septic Tank and Filter Beds of O. W. Pfouts, 1900	60
Septic Tank of A. J. Provost, Jr., 1902	61
Septic Tank of John W. Alvord, 1904	63
Septic Tank of Reid and Hanley, 1904	65
Anaërobic and Aërobic Filters of Scott-Moncrieff, 1899	75
Contact Beds as arranged by W. J. and C. J. Lomax, 1896	80
Method of Aërating Filter, J. A. Maignen, 1899	82
Elongated Contact Bed of W. L. Church, 1900	83
Method of Aërating Filter, G. D. Mitchell, 1903	84
Automatic Valve of G. L. A. Meyssonnier, 1901	100
Timing Siphon of S. J. Miller	102
Dosing Siphons of S. J. Miller, 1902	103
Rocking Valve of Williams and Whitman, 1904	104
Dosing Siphon of M. J. Adams, 1904	106
Sewer Flushing Siphon of Vibbard and Chandler, 1882	107
Siphon, by G. E. Waring, 1886	109
Siphon, by A. Rosewater, 1886	110
Blow-off Siphon, by J. W. Berry, 1900	111
Rhodes-Miller Blow-off Siphon	112
Rhodes-Williams Blow-off Siphon	113
Discharging Siphon of W. M. Venable, 1906	114
Miller's "Automatic" Siphon	115
Lowcock's Aërated Filter, 1894	119
W. M. Ducat's Percolating Filter, 1898	123
Venable's "Breathing" Percolating Filter, 1905	126

PAGE
Venable's Artificial Draught Percolating Filter, 1905 127
Stoddart Distributor, 1899 129
Radial Distributor of G. E. Ridgeway, 1901 130
Radial Distributor of Scott-Moncrieff, 1902 130
Plan of Septic Tanks at Fort Des Moines, Iowa 165
Plan of Filter Beds at Fort Des Moines, Iowa, as first constructed 166
Section through Sediment Chamber and Septic Tank, Fort Des Moines, Iowa 167
Rearrangement of Contact Beds at Fort Des Moines, Iowa 175
Suggested rearrangement of Sand Filter at Fort Des Moines 179
Enclosed Works of Sewage Purification Sub-system at Fort Leavenworth, Kansas 210, 211
Design of Contact Bed System for 2000 Persons 217, 218, 219, 222
A Simple Combination for a Small Institution 225

LIST OF PLATES

Antecedents of the Septic Tank . . . . . *opposite page* 52
View of Contact Beds at Fort Des Moines, Iowa, during reconstruction *opposite page* 177
View of Contact Beds at Fort Leavenworth, Kansas, overgrown with Weeds . . . . . *opposite page* 207

CONTENTS

Chapter.		Page.
I.	Introduction	1
II.	Sources of Information about Sewage Purification	10
III.	Aërobic Treatment of Crude Sewage	20
IV.	Mechanical Removal of Sludge	34
V.	Anaërobic Treatment of Sewage	48
VI.	Intermittent Contact Systems	78
VII.	Automatic Discharging Devices	98
VIII.	Percolating Filters	117
IX.	Summary of Engineering Principles Regarding the Design of Sewage Purification Works	134
X.	Difficulties Experienced in Some Actual Installations	162
XI.	Suggested Designs to Meet Typical Conditions	216

METHODS AND DEVICES FOR BACTERIAL TREATMENT OF SEWAGE

CHAPTER I

INTRODUCTION

WHEN any science has advanced to such a stage that practical applications of its principles may be made on a commercial scale, there arise engineering problems that are quite distinct in aspect from the problems of abstract science which precede them. The relation of the science of bacteriology to the construction of plants for sewage purification strikingly illustrates the difference between investigation which merely extends the range of our conceptions and that which applies these conceptions to practical affairs. That certain changes are wrought in sewage by the activity of minute organisms called bacteria and by the enzymes that such organisms produce, is a fact well established by the laboratory work of scientific investigators equipped mentally as well as with delicate mechanical appliances for observing the very minute. How these changes are brought about, and what is the nature of bacteria, are matters with which pure science has to deal; but how to apply the result of such study to the actual purification of the sewage of any municipality, is a problem for the engineer, and in its solution the services of a bacteriologist or of a chemist are required only to determine the character of the sewage to be treated, or of the effluent produced.

The biologist, in studying a group of micro-organisms, must

endeavor to isolate individuals or colonies and then determine the conditions of life and the vital functions of these individuals by careful microscopic study and chemical tests, which interest the engineer professionally only when they have resulted in the discovery of laws applicable to the growth of millions of millions of millions of bacteria each hour. The engineer is concerned with the sanitary effect of the lives of these diminutive beings in mass, considered with reference to engineering works, designed to produce certain results with the least expenditure and under the conditions imposed by a given locality. The engineer, therefore, needs know, not what is the particular history of the generation of each colony of bacteria, but what conditions are necessary in order that the bacteria may act upon the sewage most effectively. If these conditions can be determined, and if they can be stated precisely as the laws of mechanics or hydraulics can be stated, the engineer may utilize them to design sewage purification works without any further reference to the bacteria themselves.

To draw a clear distinction between the engineering problem and the biological problem is not to undervalue the work of the biologist and the chemist. Unless their work had been done, the engineering applications of it could not be made, or, if they were made, they would be entirely empirical, and in consequence uneconomical. But it should not be thought that the engineer can afford to be altogether ignorant of the sciences of biology and chemistry. It is essential for him to understand something of both of these sciences in order that he may be intelligent in applying the principles derived from them.

There are, however, many problems in the practical art of sewage purification which the engineer alone must solve, and with which the biologist and the chemist are very little concerned. The hydraulics of filter beds in which bacterial action is taking place should be thoroughly understood by the engineer. The hydraulics of filter beds presents very many difficult and com-

plicated problems, even if bacterial action be left out of consideration. The sewage purification engineer must also understand the hydraulics of flow in open and in closed channels, pumps, and siphons, in order that he may make all these parts of proper size and may utilize the hydraulic fall available in the design of the purification works, as will appear in discussions that follow. There are also engineering problems in precipitation, problems in pneumatics, and problems in mechanics, all of which are different from the ordinary problems in these branches of engineering, because of the changes which are taking place owing to the action of the bacteria in the sewage undergoing treatment.

Since, then, the engineering of sewage purification works may be considered as a combination of other branches of engineering, modified by a consideration of certain mechanical and chemical changes brought about in the sewage by bacterial action, it is necessary in a study of the principles of Sewage Purification to establish ideas as to how the character of sewage and the action of bacteria and other organisms make the passage of sewage through engineering works different from the passage of pure water.

Sewage is defined by the American Public Health Association as "water-conveyed excreta." This definition is somewhat too limited to apply strictly to the material carried in most sewers, which is made up of all of the domestic wastes from houses, including discharges from kitchen sinks and laundry tubs. Such mixed sewage is usually called "domestic sewage" to distinguish it from sewage which also contains waste products from manufacturing plants, dye houses, steam laundries, stables, etc. The introduction of these wastes into domestic sewage often modifies its character and renders its treatment by ordinary methods impracticable. Sewage may contain a great deal of foreign matter or a comparatively small amount of foreign matter per unit of water. The water consumed per

capita in cities and towns of the United States varies from twenty-five gallons per day to two hundred and fifty or more gallons per day; therefore it appears that the amount of impurities per gallon of sewage varies tenfold in different localities. The writer has visited two army posts, at one of which the water consumption has exceeded 400 gallons per capita, while at the other, which is located where the water supply is failing, the consumption has been about twenty-five gallons per capita. The conditions for purifying the sewage at these posts were so different as to make the character of the two works required quite unlike.

The organic material that pollutes the water of domestic sewage is already undergoing a process of decomposition when it reaches the sewer. This process is largely the result of the action by micro-organisms known as bacteria, which multiply with great rapidity, changing the character of the organic material in which they are found. There are many different kinds of bacteria, and the different kinds are capable of being nourished by different forms of organic matter; and in the processes of growth they produce different by-products. Some bacteria in acting upon organic material decompose it so as to produce gases which escape into the atmosphere. The gases produced by different substances when undergoing putrefaction are different, some of them being very offensive. The foul odors usually resulting from decomposition are not the bacteria themselves, but the by-products of their vital processes, and are caused by a chemical action of a kind similar to that which causes gas to be evolved in wine or in cider, or in bread under the action of yeast.

The bacteria are exceedingly small, there usually being millions per cubic centimeter in ordinary sewage which might not appear to the eye to be anything but water. They multiply with great rapidity wherever there is sufficient food in the liquid to sustain them provided there is not poison in the liquid

to kill them or to prevent their activity. Poisons which may kill bacteria are of two kinds: first, substances introduced into the sewage from some other source than the materials which cause the pollution upon which the bacteria feed. Such a substance is sulphate of copper, which has been employed extensively to kill algæ in reservoirs for public water supply. Almost all waste liquids from manufacturing establishments contain poisons that act in this manner to prevent the bacterial action, but the quantity of each poison per gallon required to inhibit bacterial life has a wide range of variation. The other group of poisons consists of those that are products of the bacteria themselves, and these act in a manner that may be likened to that in which poisonous gases in the atmosphere act upon a human being if he be shut in a room to which no fresh air can find access. Therefore, if we are to utilize bacteria systematically to cause the decomposition and the consequent purification of sewage, we must prevent the sewage from being contaminated by any material that would lessen the bacterial action, and we must also remove from it those products caused by the life of the bacteria which tend to bring that life to a close.

The conditions of life for various kinds of bacteria are quite different, and all organisms that are popularly termed bacteria do not belong to the same class of creatures. It is difficult to classify these beings as either animal or vegetable, for, in the microscopic world, the highly complex organizations which enable us to classify the higher animals and plants into different kingdoms, either do not exist or cannot be detected by means at our disposal. Moreover, these two kingdoms may not cover all the world of life. However, the living things that are found in sewage that are so small as to require microscopic study to determine their anatomy, are popularly grouped under the general name bacteria, although the biologist is ready to provide more precise terminology for each group. The following classification of microscopic organisms found in water is given

by Mr. George Chandler Whipple on page 171 in his book entitled "The Microscopy of Drinking Water."

CLASSIFICATION OF THE MICROSCOPIC ORGANISMS

PLANTS

Diatomaceæ	Algæ (in the narrower sense).
	Chlorophyceæ.
Schizophyceæ.	
Schizomycetes.	Fungi.
Cyanophyceæ.	Various Higher Plants.

ANIMALS

Protozoa.	Crustacea.
Rhizopoda.	Entomostraca.
Mastigo phora (Flagellata).	Bryozoa (Polyzoa).
Infusoria (in the narrower sense).	Spongidæ.
Rotifera.	Various Higher Animals.

Professor Whipple gives a discussion of the microscopic characteristics of these various groups, in chapters which will be found of interest to those desiring further information regarding this matter. The lower forms are more abundant in sewage, the fungi usually growing on the surface of the liquid, or attached to solid particles of floating matter or to the vessel in which the liquid is contained. The algæ flourish only in the presence of air and light, as they are capable of converting carbonic acid into the higher forms of organic matter. The various higher plants are only found in the effluent from sewage works, or feeding upon the product of sewage that has progressed to an advanced stage of decomposition. Of the animals, protozoa are the most important in sewage. While they do not perform such an active function in bringing about decomposition as many of the forms classified as plants, they are extremely important, because many of them are known to be the cause of some of the worst diseases to which mankind is exposed.

The classifying of micro-organisms in sewage, according to their position in the animal and vegetable kingdoms, is not of as much practical interest to the engineer as the classification

into aërobic and anaërobic groups, for it is by giving these groups in turn favorable conditions for growth that the sewage purification engineer proceeds, as the farmer proceeds by producing favorable conditions for the plants and animals he raises. The term "aërobic" is used to indicate that the organisms thrive in the presence of air, and cannot live or be active in liquid from which fresh air has been excluded, or after all the air originally present has been consumed. The term "anaërobic" designates the reverse of this. It is applied to those bacteria which do not require the presence of fresh air, or which may be even injured by the presence of fresh air.

There are many forms that, while they do not require air for their own vital activities, thrive best in the presence of other forms which do require air. Thus it is impossible to make these classifications of bacteria into aërobic and anaërobic forms strictly scientific with regard to each particular organism.

A third classification or intermediate group, to be known as "facultative bacteria," has been suggested to apply to those organisms which are most active when sewage is undergoing an anaërobic process and commences to enter upon an aërobic process.

The sewage purification engineer is practically concerned principally with two processes, — the one, anaërobic treatment of sewage, and the second, aërobic treatment. These two processes require entirely different methods. The first is conducted so as to avoid the introduction of air into the liquid, and the second is chiefly concerned with the introduction of air into the liquid, and provision for its absorption by the liquid. The organisms which assist in these processes are of peculiar interest to him, although he never has occasion as an engineer to investigate the properties of individuals or of families. He is also interested in the life history of those organisms which produce disease, in order that he may know whether his engineering works are adapted to destroy these or to greatly reduce them

in number. He is also interested in the fungi and the algæ, for they afford an index of the degree of purification that the sewage has undergone. He is also interested in those higher forms of animal and vegetable life that abound in the sewage effluent when the process has been carried to a certain definite point, as their presence indicates without any further test approximately the degree to which the purification has been carried. In subsequent chapters reference will be made to works that deal more fully with the subjects of bacteriology and microscopy and to the methods of conducting bacterial and chemical tests.

The sewage purification engineer, however, seldom has any occasion to identify particular microscopic organisms. Where such studies are necessary, they usually fall to the expert biologist. If the engineer makes any bacterial tests at all, they are usually limited to making a count of the number of bacteria per cubic centimeter in the effluent from the works. In most cases where a test of the effluent and of the process in its various stages is required, chemical tests only are applied.

As has been previously stated, sewage consists of water polluted by organic matter, chiefly excreta, and it varies as to the amount of the pollution. The process of bacterial purification consists of three stages:

First. The absorption by organic matter through the agency of bacteria of all of the free oxygen dissolved in the water, and the production of a corresponding quantity of carbonic acid, water and salts containing nitrogen.

Second. The fermentation of the organic material in the water without the agency of air, resulting in the production of nitrogen, ammonia, hydrogen, and marsh-gas, and in reducing to solution some of the organic material in suspension.

Third. The oxidation of the organic matter in solution and in suspension by the proper introduction of air through the agency of bacteria, resulting in the production of carbonic acid

gas and of nitrates and nitrites in solution, and of a peaty precipitate in suspension.

It is readily seen that certain materials present in sewage are not seriously affected by these processes. Among these is chlorine, which occurs chiefly in common salt. A sewage effluent, therefore, should be expected to contain about the same amount of chlorine as the crude sewage. It should contain a very small amount of material capable of being oxidized, and should also contain nitrates in proportion to its original pollution, although the actual amount of nitrates depends partly upon the extent to which the anaërobic process has been carried as well as upon the efficiency of the subsequent treatment. The routine work of testing a sewage effluent of a plant in operation is reduced to making oxygen absorption tests with sufficient frequency to enable the attendant to ascertain whether the works are behaving normally. The process of oxidation may be carried to any desired extent, resulting in the production of water of exceedingly great purity; but practically the object of sewage purification is not to produce drinking-water, but to produce water that will not have an injurious effect when discharged into natural watercourses. Sewage purification is not intended to take the place of the purification of water for municipal purposes, although it adds enormously to the ease with which water from natural streams may be purified for municipal use.

CHAPTER II

SOURCES OF INFORMATION ABOUT SEWAGE PURIFICATION

In all branches of engineering, the knowledge of one generation is communicated to the next through published records in magazines, official public documents and books, the books usually being to a great extent the compilations of knowledge from a large number of sources, often not recorded, for reference. To trace the successive steps in the advancement of each branch of engineering, and to give credit by name to each discoverer or inventor, great or obscure, is an interesting work, but, like the study of genealogy, it is of small interest to the man who seeks primarily information as to how to build. Therefore, in giving these references to available sources of information regarding sewage purification, the writer has not attempted to cover the subject completely from a historical point of view.

Data regarding sewage disposal in Great Britain are to be found in the Report of the Royal Commission on Sewage Disposal, in July 1901, and in subsequent reports by that body, as well as previous government reports dealing chiefly with sewage farming. The data contained in that report have been drawn upon frequently by writers upon sewage disposal, some of whom were, in fact, the media of presenting it to the Commission. These reports are available in a number of libraries in the United States.

In America the most extensive data have been collected by the Massachusetts State Board of Health, which has conducted experiments at Lawrence, Mass., for a score of years, and has likewise made systematic observations upon the results of sewage pollution throughout the State, as well as upon the

results of purification works established by various cities. The work of the Massachusetts Board has been conducted by distinguished engineers, chemists, and bacteriologists, and the reports have been liberally distributed in the United States, so that access to them is not difficult. First published in 1890, these reports on sewage purification have been continued year by year, and the later ones are now even more valuable than the earlier ones in the data they contain, though they are not so generally known, or at least referred to, except by specialists in this line of work.

The principal books dealing with this subject that are now available for ready reference are as follows:

Sewage Disposal in the United States, by George W. Rafter, Mem. Am. Soc. C. E., and M. N. Baker, Ph.B. (Associate Editor *Engineering News*), published by D. Van Nostrand Company (New York) and Sampson Low, Marston & Co., Ltd. (London), 1894. This large work consists of a compilation of data from various American sources, with comments and discussions, forming Part 1, by Mr. Rafter, and a collection of illustrated articles describing various sewage works in operation by Mr. Baker, originally published in the *Engineering News,* forming Part 2. The information contained does not, of course, extend beyond the knowledge available at the date of publication, and little attention is therefore given to contact filters, percolating filters, and other devices that are now receiving considerable attention.

British Sewage Works, by M. N. Baker, Ph.B., C. E., published by The Engineering News Publishing Co., 1904. This book contains descriptions of a number of sewage works in Great Britain, from the personal observations of the writer during a tour of inspection ending in June, 1904. It has the great advantage of being written by a party in no way interested in either magnifying the success obtained by any plant, or belittling any attainment. It is especially valuable for the

light that it throws upon the actual condition of various plants several years after they were built. It contains much data regarding capacity of beds, quantities of filtering materials, and methods of operation, but it contains very little data showing chemical or bacterial purifications secured, and it is without drawings or illustrations of any description. It is certainly one of the books that should be read by one who would be familiar with the state of this art.

The Purification of Sewage (1899), and *Bacterial Purification of Sewage* (1901), by Sidney Barwise, M.D., of London, published by Crosby, Lockwood & Son, London, and D. Van Nostrand Company, New York, the first containing 150 pages 12mo., the second 48 pages 8vo., give able presentations of the subject in concise form. They are adapted to the requirements of city officials rather than engineers, containing little quantitative information of value to the designer or operator of a purification plant.

Sewage and the Bacterial Purification of Sewage, by Samuel Rideal, D.Sc., published by the Sanitary Publishing Company, Ltd., London, and John Wiley & Sons, New York, 1900, second edition 1901, deals with the subject at considerable length. It contains discussions of the bacterial and chemical changes involved in sewage purification works, as well as descriptions of a number of engineering works. The spirit in which the book is written is expressed in the following sentence, taken from the preface of the work:

" The theoretical basis of the bacterial changes so far as they have been at present studied, must underlie all the practical schemes which may in the future be put forward, and it has been my endeavor in the following pages to deal with the subject from this point of view."

The book contains much information of value to the engineer, though not arranged especially for his reference. Dr. Rideal is recognized as an eminent authority.

The Purification of Sewage and Water, by W. J. Dibdin, F.S.C., F.C.S., published by the Sanitary Publishing Company, Ltd., London, and D. Van Nostrand Company, New York, third edition, 1903, contains 357 pages. About two thirds of the work is devoted to sewage and its purification. Mr. Dibdin is an authority on sewage purification in Great Britain, identified with the development of the art.

Sewage Works Analysis, by Gilbert J. Fowler, M.Sc. (Vict.), F.I.C., Superintendent and Chemist, Manchester Corporation Sewage Works, published by P. S. King & Son, London, and John Wiley & Sons, New York, 1902, is perhaps the most valuable small book dealing with this subject. The work is confined to giving directions regarding the methods to be pursued in making chemical and mechanical tests of sewage and sewage effluents. No engineer of purification works can afford to be without this book. A similar work, dealing with the bacteriology of the subject, is much to be desired.

The Microscopy of Drinking Water, by George Chandler Whipple, Consulting Professor of Water Analysis, Brooklyn Polytechnic Institute, etc., published by Chapman & Hall, Ltd., London, and John Wiley & Sons, New York, 1899, second edition 1905, is a valuable work for those who desire to acquire knowledge of the organisms active in water and sewage, though it is not written with special reference to sewage bacteria. The nineteen plates are exceedingly interesting.

Elements of Water Bacteriology, with special reference to sanitary water analysis, by Samuel Cate Prescott and Charles Edward Amory Winslow, both of the Massachusetts Institute of Technology, published by John Wiley & Sons, New York, and Chapman & Hall, Ltd., London, 1904, and

Examination of Water (Chemical and Bacteriological), by William P. Mason, Professor of Chemistry, Rensselaer Polytechnic Institute, published by John Wiley & Sons, New York,

and Chapman & Hall, Ltd., London, 1905, are small, handy volumes for those interested in the analysis of water for drinking purposes, as well as of more polluted waters.

Transactions of the American Society of Civil Engineers, contain valuable contributions to the literature of sewage purification, of which the following are of especial interest:

The Antecedents of the Septic Tank, by Leonard Metcalf (Vol. LXVI, Paper No. 909, presented September 25, 1901). This is invaluable in tracing the history of this subject. It is well illustrated. The discussion accompanying it is also valuable.

Sewage Disposal in America, by George W. Fuller, and *Sewage Disposal in France*, by M. Bechmann, with an extensive discussion participated in by seventeen engineers especially interested in this line, the whole forming a valuable résumé of the condition of this branch of engineering. Before the International Engineering Congress, 1905 (Vol. LIV, Part E, pages 148 to 262).

The writer has largely drawn upon the records of the Patent Office, the periodical press and trade publications, for information upon various branches of sewage works engineering, and he has endeavored to embody some of this information in available form in the present work.

LIST OF ARTICLES ON SEWAGE PURIFICATION PUBLISHED BETWEEN JUNE, 1905, AND OCTOBER, 1907

Note. Compiled from "List of Recent Engineering Articles of Interest" in Monthly Proceedings, Am. Soc. C. E.

In the Engineering Record.

Concerning Sewage Disposal, from the Standpoint of Pollution of Oysters and Other Shellfish, and Especially with Reference to their Transmission of Typhoid Fever. George W. Fuller. Abstract. August 12, 1905.

The Significance of Analyses of Effluents from Sewage Works. August 5, 1905.

Sewage Disposal in Ohio, Wisconsin and Illinois. September 2, 1905.

Sewage Purification at the Eastern Indiana Hospital for the Insane. October 28, 1905.

The Tankage of Sewage. F. Wallis Stoddart. (Paper read before the Royal Institute of Public Health.) Nov. 18, 1905.

Sewage Disposal at Berlin, Ontario. December 23, 1905.

The Sewage Purification Works at Columbus, Ohio. Julian Griggs. December 30, 1905.

Present Practice in Sewage Disposal. January 27, 1906.

Sewage Disposal at Downer's Grove, Ill. W. S. Shields. (Paper read before the Illinois Society of Engineers and Surveyors.) February 3, 1906.

Some British Sewage-Disposal Apparatus. February 10, 1906.

Sewage Purification and Refuse Incineration Plant, Marion, Ohio. George H. Pierson. March 17, 1906.

The Sewerage System of Centerville, Iowa. March 24, 1906.

Notes on Sprinkling Filters for Sewage Treatment: A Résumé of American and Foreign Experience. George W. Fuller. June 23, 1906.

Experimental Methods as Applied to Water and Sewage Works for Large Communities. George W. Fuller. July 21, 1906.

A New Form of Primary Contact Bed. Aug. 11, 1906.

The Disposal of the Sewage of Paterson, N. J. Allen Hazen. Serial beginning August 11, 1906.

Sludge Treatment in Relation to Sewage Disposal. John D. Watson. (Paper read before the Association of Municipal and County Engineers.) September 1, 1906.

The Life-History for Eight Years of the Experimental Coke Clinker Filter-beds at Kingston-on-Thames. Douglas Archibald. (Abstract of paper read before the Royal Sanitary Institute.) September 22, 1906.

Experience with Fine-Grain Percolating Filters for Sewage. October 20, 1906.

The Baltimore Sewage Testing Station. November 17, 1906.

Experiments in Distribution of Sewage over Sprinkling Filters at Waterbury, Conn. William Gavin Taylor. January 5, 1907.

Sewage Disposal at Chicago and Vicinity. Rudolph Hering and George W. Fuller. (Report to the International Waterways Commission.) February 2, 1907.

The Sewage Disposal Works at Kirksville, Mo. March 23, 1907.

A Decision on the Cameron Patent for Process of and Apparatus for Treating Sewage. March 30, 1907.

The Use of Copper Sulphate at Pawtucket, R. I., to Prevent the Clogging of Sewage Filter Beds by Blanket Growth of Micro-organisms. (From *Bulletin*, Rhode Island State Board of Health.) March 30, 1907.

The Septic Tank of Belleville, Illinois, Sewerage System. April 13, 1907.

The Sewage Disposal Plant of the Soldiers' Home, Johnson City, Tennessee. April 27, 1907.

The Admission of Trade Wastes into the Sewers of Reading, Pennsylvania. May 25, 1907.

A Judicial Review of American Stream Pollution Decisions. June 29, 1907.

The Use and Abuse of Sewage Purification Plants. A. Elliott Kimberly. (Abstract from paper read before the Ohio Engineering Society.) August 31, 1907.

The Sewage Purification Plant at Reading, Pennsylvania. October 5, 1907.

In the Engineering News.

Septic Tanks and Double Contact Beds at Burnley, England. October 26, 1905.

The Proposed New Sewage Settling Tanks, Contact and Storm Beds for Sheffield, England. December 7, 1905.

Notes on Sewage Disposal. Baldwin Lathan, M. Inst. C. E. (Abstract of Presidential Address delivered before the Association of Managers of Sewage Disposal Works.) December 21, 1905.

What Methods are Most Suitable for Disposal of Sewage on the Atlantic Coast? George W. Fuller. (Address before New Jersey Sanitary Association.) January 25, 1906.

Combined Septic Tanks, Contact Beds, Intermittent Filters and Garbage Crematory, Marion, O. R. Winthrop Pratt. Feb. 22, 1906.

The Sewage Disposal Plant at Downers Grove, Illinois. W. S. Shields. (Paper read before the Illinois Society of Engineers and Surveyors.) February 8, 1906.

Report of Sewage Purification Experiments at Columbus, O. March 29, 1906.

Review of the History of the Septic Tank. J. W. Alvord. (Reprint from Proceedings Illinois Society of Engineers and Surveyors.) August 2, 1906.

The Trickling Filter at the Sewage Experiment Station of the Massachusetts Institute of Technology. C. E. A. Winslow and Earle B. Phelps. August 16, 1906.

Report of a London Engineer on Sewage Disposal at Toronto, Ontario. September 6,. 1906.

The Influence of the Saline Constituents of Sea Water on the Decomposition of Sewage. J. E. Purvis and C. J. Coleman. (From *Journal* of the Royal Sanitary Institute.) October 11, 1906.

A Method for Testing and Comparing Sewage Sprinklers. Earle B. Phelps. (From the Sanitary Research Laboratory and Sewage Experiment Station of the Massachusetts Institute of Technology.) October 18, 1906.

Fungus Growth on Experimental Percolating Sewage Fillers at Waterbury, Conn. Leo. F. Rettger. November 1, 1906.

The Treatment and Disposal of Sewage. John D. Watson, M. Inst. C. E. (Abstract of paper read before the Incorporated Sanitary Association of Scotland.) November 1, 1906.

Residential Septic Tanks. Burton T. Ashley. (Abstract from "Sewage Disposal without Sewers," read before the American Society of Inspectors of Plumbing and Sanitary Engineers.) January 31, 1907.

Sewage Disposal at Chicago and Vicinity. Rudolph Hering and George W. Fuller. (Report to the International Waterways Commission.) January 31, 1907.

The Experimental Sewage Treatment Works for Baltimore, Md. February 28, 1907.

The Municipal Sewage Experiment Station of Waterbury, Connecticut. William Gavin Taylor. February 28, 1907.

A Decision on the Cameron Patent for Process of and Apparatus for Treating Sewage. March 28, 1907.

The Use of Copper Sulphate at Pawtucket, R. I. to Prevent the Clogging of Sewage Filter Beds by Blanket Growth of Micro-organisms. (From *Bulletin*, Rhode Island State Board of Health.) April 4, 1907.

Eight Years' Work with Trickling Sewage Filter at the Lawrence Experiment Station. H. W. Clark. April 11, 1907.

The Comparative Disposition of Organic Matter by Sand, Contact and Sprinkling Filters. H. W. Clark. (Abstract of paper read before the American Public Health Association.) June 6, 1907.

Sewage Experiments at Matunga, Bombay. Gilbert J. Fowler. August 8, 1907.

Work at the Madeline Sewage Experiment Station, Pasteur Institute of Lille, France. Earle B. Phelps. August 15, 1907.

The Use and Abuse of Sewage Purification Plants. A. Elliott Kimberly. (Abstract from paper read before the Ohio Engineering Society.) August 29, 1907.

In Minutes of Proceedings, Institute of Civil Engineers, London, England.

The Sewerage of Douglas, Isle of Man. Edmund Herbert Stevenson and Edward Kynaston Burstal, M. M. Inst. C. E. Vol. 160.

On the Elimination of Suspended Solids and Colloidal Matter from Sewage. Alfred Stowell Jones, M. Inst. C. E., and William Owen Travis. Vol. 164.

In Journal, Association of Engineering Societies, 31 Milk St., Boston.

Sewage Purification with Special Reference to the Problem in Ohio. R. Winthrop Pratt. June, 1905.

A Winter Visit to Some Sewage Disposal Plants in Ohio, Wisconsin and Illinois. C. E. A. Winslow. June, 1905.

Sewage Disposal at Manchester and Birmingham. Leonard Parker Kinnicutt. March, 1906.

Operation of Sewerage Works. (Papers read before the Boston Society of Civil Engineers.) April, 1906.

The Relation of the Suspended Matter in Sewage to the Problem of Sewage Disposal. Harrison P. Eddy and Almon L. Fales. (Paper read before the Boston Society of Civil Engineers.) September, 1906.

The Maintenance of Sewage Filters in Winter. George E. Bolling. (Paper read before the Boston Society of Civil Engineers.) January, 1907.

Comparative Résumé of the Sewage Purification Tests at Columbus, Ohio. George W. Fuller. (Paper read before the Boston Society of Civil Engineers.) August, 1907.

In Municipal Engineering.

The Tankage of Sewage. F. Wallis Stoddart. (Paper read before the Royal Institute of Public Health.) January, 1906.

Advance in Sewage Purification. Alexander Potter. (Abstract of paper read before the American League of Municipalities.) December, 1906.

In Technology Quarterly, Massachusetts Institute of Technology, Boston.

The Scientific Disposal of City Sewage: Historical Development and Present Status of the Problem. C. E. A. Winslow. December, 1905.

The Sterilization of Sewage-Filter Effluents. Earle B. Phelps and William T. Carpenter. December, 1906.

In Engineering and Contracting.

The Sewage Disposal Problem and, in Conclusion, a Description of the Septic Tank System. H. D. Wylie. March 1, 1907.

Big Four Sanitary Sewage Disposal System. May 3, 1907.

In Transactions, Canadian Society Civil Engineers, Montreal.

Notes on the Septic Tank Process of Sewage Purification. W. R. Butler, Proceedings Can. Soc. C. E. Vol. 20, Pt. 2.

CHAPTER III

AËROBIC TREATMENT OF CRUDE SEWAGE

THE purification of sewage can only be brought about by removing practically all the organic matter from it. Whether or not an anaërobic process be employed for preliminary treatment, an aërobic process is necessary to produce an effluent that will not putrify upon standing. This was known before the introduction of anaërobic processes to assist by reducing suspended solids to solution.

The aërobic processes may be classified as follows:

First. Dilution of the sewage by discharging it into a running stream or a large body of water containing an amount of air dissolved in it more than sufficient fully to oxidize all the organic matter. This method of disposal, as applied to raw sewage, has the defect of allowing solid particles to sink to the bottom of the stream, or to float to the shore, and not undergo immediate mixing so that the air in the water can act. This objection does not apply to a good septic effluent, if the mode of discharging it into the stream insures mixing, and the volume of fresh water is sufficient. But where this mode is employed, care must be taken to make sure that no use is made of the water of the stream for a considerable distance below the sewer outlet, to insure a complete oxidation of the impurities, and the absorption of by-products by other aquatic life.

Second. Sewage farming, or using crude sewage for irrigation. This process is especially applicable where the sewage is much diluted, and has been conveyed a considerable distance in running water, and where water for irrigation is in demand, as in California. If the sewage is very foul, few plants producing

marketable products will thrive on the land where it is used; and if there is an abundance of good water to raise crops, the crude sewage offers no advantage sufficient to pay for the labor of applying it.

Third. Intermittent sand filtration. This process consists of delivering the sewage to a specially prepared field of sand for a period, and then to another field, returning to the first field again as soon as it has recovered from the first application. Its object is to dispose of the sewage and not to raise crops. It may be applied to crude sewage, or to an effluent from a preliminary process.

Fourth. Intermittent contact system. This method consists of alternately admitting sewage into and draining it from a receptacle containing porous or granular material, so as to fill and to empty the receptacle. The surfaces of the porous material become covered with bacteria, which alternately act upon the sewage and are exposed to air.

Fifth. Percolation through deep beds of granular material. This may be continuous or intermittent. Sewage and air pass through the beds at the same time, and are acted upon by bacteria on the surfaces of the material therein.

These five methods are here given in the order of their complexity, the difficulty of their design, and the delicacy of their operation. They will be described more minutely in succeeding chapters. Several of these methods may be combined in one installation, and continuous sand filtration may be added to remove bacteria from the final effluent, if desired.

In all these systems, the essential requirements are:

(*a*) The sewage must be brought into intimate contact with a sufficient quantity of fresh air. The quantity of air necessary to completely oxidize the impurities of sewage is usually less than the volume of sewage, but it is difficult to apply the air so that it can be absorbed. For example, assume that a given sewage requires 12 parts of oxygen to 100,000 parts of sewage, to com-

plete the reduction of the organic compounds. As air contains, by weight, only 20 per cent oxygen, and as its specific gravity, compared with water at ordinary temperatures, is about $\frac{1}{800}$, the volume of air necessary to purify 100,000 gallons of sewage water is $\frac{12 \times 800}{.20} = 48{,}000$ gallons. Thus, to purify this sewage, it would require all the oxygen of almost half an equal bulk of air. To insure the absorption of the oxygen in any practical device, a much greater volume is required.

(*b*) The air must be introduced in such a manner as to insure its absorption. The quantity of air necessary to produce purification cannot be contained in solution in ordinary sewage. For example, the maximum amount of air that water will ordinarily hold in solution at ordinary temperatures will not exceed 1.2 parts per 100,000; and, in consequence, to introduce enough oxygen directly into the liquid of the sewage just taken for illustration would require a dilution of not less than ten times its volume of pure aërated water. Because of this limited capacity of water for holding oxygen in solution, attempts to introduce air directly into tanks containing sewage have not proven successful, and various other methods of treatment have been adopted whereby the surface which may be subjected to aëration for considerable periods has been greatly increased.

(*c*) The sewage must be retained subject to bacterial action, with an adequate air supply, long enough to permit the completion of the process of purification.

It will thus be seen that the various methods of aërobic treatment depend for their success upon the same principles, though these may be applied in widely different manners.

Disposal by Dilution. To what has already been said about this method of purification little need be added. The method is, of course, the cheapest to any given community, if it is unobjectionable from a sanitary point of view, and a stream of large

size is near at hand. Where a septic tank is employed in coöperation with disposal by dilution, the method is entirely inoffensive if the volume of water into which the sewage is discharged is adequate. Opinions differ, however, as to what this volume should be. Rideal states that for a strong sewage a dilution of twenty volumes is necessary to secure the oxygen theoretically required for purification. He also gives the following: *"In the raw sewages yielding the effluents referred to in the table below, the oxygen-consumed figure was as follows, in parts per 100,000: —

Exeter, 6.56. Sutton, 2.94. Caterham, 14.97.

TYPICAL EXAMPLES OF THE OXYGEN RELATIONS.

Parts per 100,000.

	N as nitrate.	O in nitrate. $N_2 : O_5$.	N as nitrite.	O in nitrite. $N_2 : O_3$.	Total available oxygen. (Lowest estimate.)	Oxygen consumed.	Ratio of available oxygen to one of oxygen consumed.	Volumes of oxygen-saturated water required to supplement the available oxygen.	Percentage of nitrogen oxidized.
Wembley Sewage Farm, Effluent, 1896	.75	2.14	heavy	...	2.14	1.79	1.2	0	48.7
Croydon Sewage Farm, Effluent, 1895	.88	2.15	"	...	2.51	1.29	1.94	0	63.
River Brent, polluted, 1896 . .	0	0	ft. tr.	...	0	2.32	0	2.32	0
Precipitation and Coke-breeze filter, Dibdin, 1894	.202	.577	...	...	.577	1.04	.55	.46	...
Tank Effluents —									
Exeter, 1896 . .	.041	.117	trace	...	.117	4.32	.027	4.2	1.
Ashtead, 1898 . .	.12	.343	0	0	.343	9.84	.035	9.5	1.
Caterham, 1899 .	0	0	trace	...	...	9.25	0	9.25	trace
Sutton, Coarse bed, 1899 . .	.73	2.09	.186	.316	2.41	1.46	1.65	0	27.
Filtrates (final effluent) averages —									
Exeter, 1897 . .	.843	2.44	.565	.970	3.41	.96	63.53	0	33.
Ashtead, 1898 . .	6.44	18.4	.03	.051	18.45	.60	93.0	0	91.6
Caterham, 1899 .	9.0	25.74	.346	.59	26.33	2.71	9.7	0	62.
Sutton, 1899 . .	3.33	9.51	.108	.184	9.69	.83	11.7	0	82.

* Rideal, p. 110.

Folwell * states that the amount of running water required to dispose of sewage by dilution is usually placed between 1500 and 3500 gallons per capita per day. The quantity of water demanded by any sanitarian will depend upon the factor of safety he allows. The greatest objection to this method of disposal is that it is known that diseases may be carried great distances by streams, and communicated to those who drink the water below, even when to all practicable tests the water appears harmless. It is also known that sewage-polluted mud deposited in river bottoms may cause epidemics of typhoid fever when disturbed by freshets. This method is therefore objectionable because it is dangerous. It is, nevertheless, the prevailing method of disposal in America, though many States are now legislating against it. The installation of effective septic tanks on all sewers that discharge into rivers and streams is practicable, and could be achieved, if forced by law, at comparatively small cost. Such a step, however, should be regarded as one of progress, never as the final solution of the sewage disposal problem.

Sewage Farming. Sewage farming, or "Broad Irrigation," has for its object the use of the sewage for fertilizer as well as of the sewer water for irrigation. It requires constant supervision,— much more than ordinary irrigation,— for the reason that the flow of the sewer can never be shut off, whether the plants under cultivation need water or not. In Great Britain it is estimated that for broad irrigation one acre of land is required for each one hundred inhabitants. The practicability of the system depends upon the nature of the soil, and in many places there is constantly a danger that the liquid may sink to watercourses beneath, — through either fissures or beds of porous material, — and find its way unpurified to neighboring wells, springs, or watercourses.

"The areas of land that have thus, in the past, been officially

* "Sewerage," by A. P. Fowler.

demanded in England for the purification of sewage according to the process adopted, are as follows: it must, however, be remembered that a much less amount is often used successfully with proper management and care, and on the other hand local conditions may even demand larger quantities:

POPULATION PER ACRE OF LAND

1. Irrigation without precipitation:
   Stiff clay, 1 acre for every 25 persons.
   Loamy gravel, 1 acre for every 100 persons.
2. Intermittent filtration without precipitation:
   Sandy gravel, 1 acre for every 100 to 300 persons.
3. Irrigation and precipitation:
   Clay, 1 acre for every 200 persons.
   Loamy gravel, 1 acre for every 400 persons.
4. Intermittent filtration and precipitation:
   Sandy gravel, 1 acre for every 500 to 600 persons.
5. Precipitation and filtration through especially prepared filters, followed by irrigation:
   1 acre for every 2000 persons." *

To make sewage farming profitable, with raw sewage to be disposed of, not only the land, but the crops grown, must be suitable.

Italian rye grass is stated to be one of the best of crops to grow, yielding six to seven crops of hay per year. *Mint* is said to have been profitable. The sewage may be used on a plot growing hay for two or three years, and then put into vegetables for a year, to advantage. Success in this kind of agriculture must depend upon adapting the crops to the conditions, and keeping the conditions under careful control.

Berlin, Germany, has the most extensive sewage farms. In 1890 the area under cultivation was 19,000 acres, of which 11,000 were under irrigation. The subsoil is sandy. The population served was 1,600,000 persons. It is said that these

* Rideal, p. 127.

farms produce a profit over working expenses, exclusive of the cost of pumping.

"Deherain has determined the quantity of water exhaled in one hour by certain growing leaves exposed to the sun.

Plant.	Temperature of the air.	Weight of water transpired by 100 parts of leaves.		
	deg. C.	I.	II.	III.
Colza	25	1.3	1.5	1.0
Colza	36	12.0	...	...
Wheat	19	74.2	71.8	...
Wheat	28	88.2	...	...
Rye	36	100.	99.	92.

Therefore in one hour a young leaf of a cereal evolves about its own weight of water." *

In sewage farming, as in other methods of oxidizing sewage, the work is done by the bacteria, which are in the soil, and must be furnished with air as well as with sewage. The plants grown consume a portion of the by-products, both gaseous and liquid. Even hardy ones are, however, injured by gases produced by anaërobic decomposition, and by some varieties of the bacteria and fungi unless care is taken to prevent. These difficulties may be greatly reduced by partially purifying the sewage before applying it to the farm.

Intermittent Sand Filtration. Intermittent sand filtration has been adopted extensively and with great success in the United States, chiefly in New England, as the result of researches carried on by the Massachusetts State Board of Health, the Reports of which have been for some years available, and have furnished data directly or indirectly for writers and for engineers interested in sewage purification in this country, besides receiving careful study in Europe. It appears now to be an estab-

* Rideal, p. 117.

lished fact that sewage can be filtered through sand at rates of from 250,000 gallons to 400,000 gallons per acre per day, producing an effluent of a quality that will not pollute streams to a serious extent. With filters of coarse sand, an equivalent of from 200,000,000 to 300,000,000 gallons per acre per year is possible. Lawrence filtered at a rate of 300,000 gallons per acre per day for three years.*

In applying this method of treatment, the uniformity and coarseness of the sand in the filter, especially of the upper eight or ten inches, are of the utmost importance. It has been proven that if a filter has been some time in use, the results obtained by using the sand of a coarse quality are equal to the results obtained by using fine sand, and that the capacity of the filter is greater with the coarse than with the fine sand. The rate at which filtration can be satisfactorily accomplished depends upon the concentration of the sewage. The filter serves not only to remove the organic matter from the sewage, but also to retain that matter during the period of aëration while it is being oxidized. The oxidation is what chiefly determines the capacity of the filter, and the designer must therefore make the filter beds of a size proportionate to the number of people to be served rather than to the quantity of liquid to be passed through the beds, unless the sewage is very dilute. The quantity of liquid, however, cannot be ignored, for it takes a certain time for the liquid to pass through the beds, and during this time aëration is not taking place.

In most sand filters of the intermittent type, the sewage is allowed to run upon the surface of the bed and spread itself freely thereover. The flow is then diverted to another bed, each bed in turn receiving a certain quantity, which flows downward and escapes through under-drains placed from two feet to ten feet below the surface. By this method the surface of the sand soon becomes covered with a thin layer of material strained

* Massachusetts State Board of Health, Reports, 1890.

out of the sewage, so that the liquid is less able to enter the surface of the bed than to sink into the bed after it has passed beneath the surface. In some beds the surface is provided with furrows into which the sewage is run so as to spread itself over the bed with considerable uniformity and to cause the sediment to collect in certain parts only, as well as to lessen danger of freezing. Treatment by intermittent filtration requires that considerable attention be paid to maintaining the surface of the beds in good condition by frequent raking and removing of sludge. It is said that the cost of this in various towns in Massachusetts ranges from $3 to $11 per million gallons of sewage, or from 12 cents to 30 cents per capita per annum.

This system is to be recommended because of its simplicity in that it requires very little apparatus, and also that the attention devoted to its care does not require a high order of intelligence except on the part of some one person to give the work occasional supervision. The effluent produced is usually comparatively free from bacteria. In Massachusetts some difficulty is experienced on account of freezing. In some other parts of the United States this would be more serious, but in Massachusetts it does not result in making the system inoperative, although it does necessitate the greatest of judgment in the working of the beds.

For the design of sand filter beds for the intermittent filtration of sewage, the researches of the Massachusetts State Board of Health have left little data to be ascertained; and where the conditions for such works are eminently favorable, the engineer cannot do better than to apply directly the data given in the official reports. He must consider the size of his beds, the protection against freezing, the means of applying the sewage, and the treatment prior to applying it to the beds, all of which leave him some exercise of judgment.

The smallest size of beds that can be employed with satisfactory results depends more upon the character of the sand

than upon any other single matter; and consequently a "sand analysis" is of the greatest value, — in fact, a necessary preliminary step. The first requisite is that the sand shall be of material not readily soluble in water or organic acids. Given this, the fineness must be considered.

In the following table are given mechanical analyses of seven samples of natural sand experimented with by the Massachusetts State Board of Health:

MECHANICAL ANALYSIS OF SAND, PER CENT IN SAMPLE.

Diameter in millimeters.	No. 5.	No. 4.	No. 2.	No. 9.	No. 6.	No. 1.	No. 16.
Finer than 12.6	99	...	...	...	83	100	98
6.2	96	...	...	...	73	97	27
2.2	92	...	...	...	57	85	0
.98	89	...	...	100	32	53	...
.46	80	...	100	91	13	7.	...
.24	67	100	90	26	7	1.5	...
.12	51	85	43	3	4	0	...
.06	33	35	10	0	2	...	...
.03	16	10	2	...	0.5	...	...
(Organic) .01	6	1	0	...	...	...	...

Filter beds filled with these materials were found to be capable of being worked continuously at the rates shown in the following table:

Number of sample.	Diam. of grain mm. 10% finer than mm.	Depth of material feet.	Gallons per acre each dose.	Per cent of volume.	Number of doses in one week.	Gallons per acre per day.
16	5.	5	2,800	.17	500	200,000
1	.48	5	40,000	2.45	18	103,000
6	.35	4	70,000	5.37	6	60,000
9	.17	5	120,000	7.36	6	103,000
2	.06	5	140,000	8.60	3	60,000
4	.03	5	80,000	4.91	3	34,000
5	.02	5	...	...	...	

In case of sample No. 16, the coarsest given, the doses were applied about three times per hour, and in quantities so small, as, if spread in a uniform layer over the bed, would cover it to a depth of only one tenth of an inch. It seems hardly necessary to point out that such doses cannot be applied by flooding, but must be administered by some sprinkling device. Such a bed should be classed as a percolating filter rather than an intermittent sand filter, and the principles applying to it are discussed in a subsequent chapter.

In the case of sample No. 1, the doses were applied every eight hours, in quantities sufficient to cover the surface to a depth of one and one half inches. Sewage could be thus applied suddenly to three beds in turn by means of triple alternating (or rotating) siphons, discharging the contents of a dosing tank capable of accumulating the sewage for two hours and forty minutes between discharges; or it could be applied to a large number of beds by hand-controlled gates, without any dosing tank.

In the case of sample No. 9, the dose was sufficient to cover the bed to a depth of four and one half inches, and was applied once in twenty-four hours. In this, as in the beds containing finer grades of sand, the sewage could best be run upon each bed direct from the sewer for a certain portion of each day, and turned to other beds the rest of the time. This is the method usually employed in intermittent sand filtration. To be properly done, it requires the care of an attendant all of the time.

With sand filters five feet deep, to which from 30,000 gallons to 240,000 gallons per day may be applied to the acre, there are required from three to eight cubic yards of sand per capita, according to the grade of sand and the quantity of water per capita. Where natural sand beds are available, though of low grade, it may be most economical to use them with no preparation other than grading, underdraining, and preparing the surface; but where sand must be transported and placed in the

filter beds at a location selected, it is obvious that either careful selection of natural material, or artificial preparation of it, to secure the most effective degree of coarseness, must be resorted to. The latter is not often done on sand filters, as contact beds and percolating filters can accomplish the same results with a much less volume of prepared material, and as the grading of sand is not usually considered easy. Sand may be graded satisfactorily by several means. First, by mechanical screening. This is both difficult and expensive, especially when the sand contains dirt or rootlets. Fine screens rapidly clog. The process can be carried on successfully if the sand is very dry, or if it is screened in running water, but not with moist sand.

If dry sand is allowed to flow freely from a spout into a conical pile, always falling on the point of the cone, it will grade itself, the finer particles remaining in the center, and the larger rolling down to the periphery of the base. Sand precipitated from suspension in a running stream will likewise grade itself, the larger particles settling farther up stream. This makes it very easy to secure sand of any degree of fineness if the supply is obtained by dredging with a centrifugal pump. In order to secure the largest possible percentage of void spaces in sand or gravel of any degree of fineness, the ratio between the diameters of the largest and the smallest particles should not be larger than 5 : 1. When this ratio is larger, the smaller particles can fill the spaces between the larger without holding them from contact with one another. Particles smaller than a given size should be excluded altogether from prepared material, — or at least not permitted to be more than 2 per cent by weight. For example, with sand of hard, rounded grains, the specifications might state: "The sand shall be screened and deposited in water so as to contain not more than 2 per cent by weight of earth or fine material particles smaller than .2 mm. in diameter nor more than 10 per cent larger than 1 mm. in diameter." Of the samples given in the table,* No. 1 would fill this specification

* See p. 24.

if screened dry, whereby 47 per cent would be removed, the balance being rendered much more effective. No. 6 would require screening and washing to make it meet the requirements as to size, and No. 9 would require washing but no screening. No. 16 is too coarse to use at all under these specifications, and No. 2 and No. 4, too fine. No. 5 would yield 22 per cent of useful material. In any event, the engineer should have analyses of all available sands, and knowledge of their cost, before preparing his specifications, whether he desires to use sand as it comes from the pit, or to prepare it to order.

If any unprepared sand (having greater ratio than 5 : 1 of the diameter of the largest and smallest particles) is used, great care must be exercised in placing it in the beds, to prevent stratification owing to larger particles rolling down the surfaces of the piles. This is a serious defect in many beds. The materials ought to be of the same grade throughout.

If we consider only those sand filters upon which the sewage is distributed periodically by being merely run over the surface of the bed, we exclude from this category the filters of very coarse material, such as sample No. 16, where the percolation is very rapid, and the application of the liquid must be very rapid, or distributed in sprays or drops. With this limitation, sand filtration cannot be effected at rates as rapid as hitherto stated. In a paper before the American Association for the Advancement of Science,* Professor Leonard P. Kinnicutt, of Worcester Polytechnic Institute, expressed the opinion that by the intermittent sand filtration method, with *natural sand*, from 50,000 gallons to 75,000 gallons of domestic sewage can be purified each day.

Mr. George W. Fuller has compiled the following table from reports of the Massachusetts State Board of Health: †

* Science, August 1, 1902.

† "Sewage Disposal in America." Transactions Am. Soc. C. E., Vol. LIV, Part E, p. 175, 1905.

AVERAGE DATA SHOWING RATES OF FILTRATION AND COMPOSITION OF INFLUENTS AND EFFLUENTS OF 5-FT. FILTERS AT LAWRENCE, CONTAINING MEDIUM FINE SAND, AND TO WHICH WAS APPLIED THE STATION SEWAGE AFTER RECEIVING VARIOUS KINDS OF PREPARATORY TREATMENT.

Filter number.	Effective size of filtering material in millimeters.	Preparatory treatment received by influent.	Years covered by averages.	Average number of gallons applied per acre daily for 7 days in the week.	Influent. Parts per million. Oxygen consumed.	Influent. Parts per million. Nitrogen as ammonia. Albuminoid: Total.	Influent. Parts per million. Nitrogen as ammonia. Albuminoid: Susp.	Influent. Parts per million. Nitrogen as ammonia. Free.	Influent. Parts per million. Chloride.	Influent. Bacteria per cubic centimeter.	Effluent. Parts per million. Oxygen consumed.	Effluent. Parts per million. Nitrogen as: Ammonia. Albuminoid.	Effluent. Parts per million. Nitrogen as: Ammonia. Free.	Effluent. Parts per million. Nitrogen as: Nitrates.	Effluent. Bacteria, per cubic centimeter.
9a	0.07	None	1891–1902	58 688	40.0	7.20	3.09	35.0	87.5	2 299 000	4.8	0.462	7.35	23.60	12 400
12a	0.19	Filtered through coarse gravel, aërated	1892–1897	503 030	10.1	1.43	...	7.1	92.0	273 700	2.4	0.214	2.57	20.46	1 500
13a	0.19	Sedimentation	1893–1897	177 049	30.6	4.27	1.61	31.8	98.4	2 100 000	2.9	0.324	4.43	24.66	4 300
14a	0.19	Strained through coke	1894–1899	236 587	22.0	3.10	0.98	28.8	93.2	1 194 000	2.9	0.248	2.04	25.40	1 300
19	0.17	Chemical precipitation	1893–1897	188 065	20.9	2.80	0.81	30.8	93.8	924 000	2.6	0.266	3.59	27.14	2 400
100	0.26	Septic treatment	1898–1902	208 024	26.3	3.19	1.21	36.2	97.2	743 100	7.5	0.731	7.79	27.90	62 900
116	0.17	Septic treatment	1898–1902	184 235	30.0	3.51	1.03	38.1	86.1	881 800	3.6	0.287	3.24	31.40	1 600
118	0.23	Septic treatment, aërated	1899–1902	212 253	32.4	3.56	1.13	37.4	81.1	1 067 500	6.8	0.562	5.19	26.30	12 000

CHAPTER IV

MECHANICAL REMOVAL OF SLUDGE

THE three methods of sewage disposal outlined in the previous chapter, namely, disposal by dilution, disposal by sewage farming, and disposal by intermittent sand filtration, have been applied extensively to crude sewage, and still are in use very extensively. Disposal by dilution is, where practicable, the cheapest of all methods, but it is almost always open to criticism from a sanitary point of view. Sewage farming with crude sewage has not usually been practicable and profitable because the crude sewage is injurious to most plants. Intermittent sand filtration has been proven to be effective and simple, and has been adopted in the United States more extensively than any other system, excepting disposal by dilution, which it has usually supplanted or supplemented. All of these systems are aërobic, and capable of dealing with crude sewage. Other aërobic systems described in subsequent chapters are equally capable of producing purification, but cannot be applied to crude sewage without requiring too frequent renewal of materials contained in the filter beds. Sand filtration and sewage farming also can be more satisfactorily conducted if the solid parts are removed before the sewage is run over the filter beds or into the irrigation ditches.

The removal of the suspended and floating solids is therefore a matter of much importance. There are two general methods of doing this, namely, mechanical removal, by straining or rapid precipitation, or both; and bacterial removal, or the dissolution of the solid particles by bacterial action, whereby they are reduced to solution or to gas. These two methods will be

described before the more elaborate aërobic processes for subsequent treatment are discussed.

Straining or screening of sewage does not require in this connection any lengthy description. Screens of various designs have been applied for this purpose, the most interesting of which have been used in connection with sewage pumping stations. In small sewerage systems, especially in those where domestic sewage only is handled in the sewers, screens are seldom necessary or desirable, and occasional skimming of the surface of the liquid in the precipitation tank or the septic tank is sufficient to remove the larger solid bodies that require such removal. But in larger systems mechanical screens are desirable, for though there is little material to be screened from the sewage from a population of several thousand, there is much more in the aggregate from a population of several hundred thousand, so that for large quantities of sewage mechanical straining is economical.

Rapid precipitation of solids is accomplished either with or without the assistance of chemicals. When chemicals are not used, only the coarser particles of solid matter can be removed by simple sedimentation, as bacterial action prevents the settling of fine sediment. Rapid sedimentation without the use of chemicals, with frequent removal of the sediment before it undergoes much decomposition, has been found to be the best preparation of crude sewage for intermittent sand filters. Sewage so prepared still contains a large proportion of the solids originally held in suspension, but not enough seriously to interfere with the working of the filter beds. Where this treatment is employed, it is desirable to run the sewage upon the filter beds with as little decomposition of the organic matter due to anaërobic action as possible.

Precipitation with the assistance of chemicals or coagulants has been employed extensively, especially in Great Britain, and is still preferred to any other preliminary treatment by some

authorities, although others prefer to substitute for it some anaërobic bacterial treatment hereafter described. Chemical treatment is able to cope with various manufacturers' wastes often present in municipal sewage, — wastes which are injurious or fatal to bacterial action. Factories, dye-houses, laundries, paper mills, tanneries, and, in fact, all establishments that discharge liquids containing chemicals, oils, or matter other than human excreta and household drainage, into the sewers, often even when such chemicals are very small in relative amount, have a very deleterious effect upon bacterial treatment processes, and if such wastes are not properly treated so as to make them harmless to bacterial action before they are discharged into the sewers, they may render the chemical treatment of the whole of the sewage a necessity, and thus cause far greater expense than would have been incurred if the injurious wastes had been disposed of by separate systems.

It is not the intention of this book to discuss the special treatment of sewage contaminated by manufacturers' wastes. Precipitation of sludge by means of chemicals, however, is by no means confined to sewage that contains such large quantities of waste chemicals as to render its treatment otherwise difficult or impossible. The chemicals usually employed in largest quantities have for their object the coagulation and precipitation of organic matter in suspension in a fine state of subdivision, so as to leave the liquid practically free from suspended matter. The tanks used for precipitation are also of interest as throwing light upon the design of tanks subsequently used for bacterial fermentations, having many features in common therewith. Several illustrations of patents granted for devices and processes for sludge removal will therefore be given here.

Figure 1 illustrates in plan and section the precipitation tanks described in patent No. 108,664, issued October 25, 1870, to G. W. Wigner. It shows a tank similar in several respects to "septic" tanks illustrated later, in combination with a filter

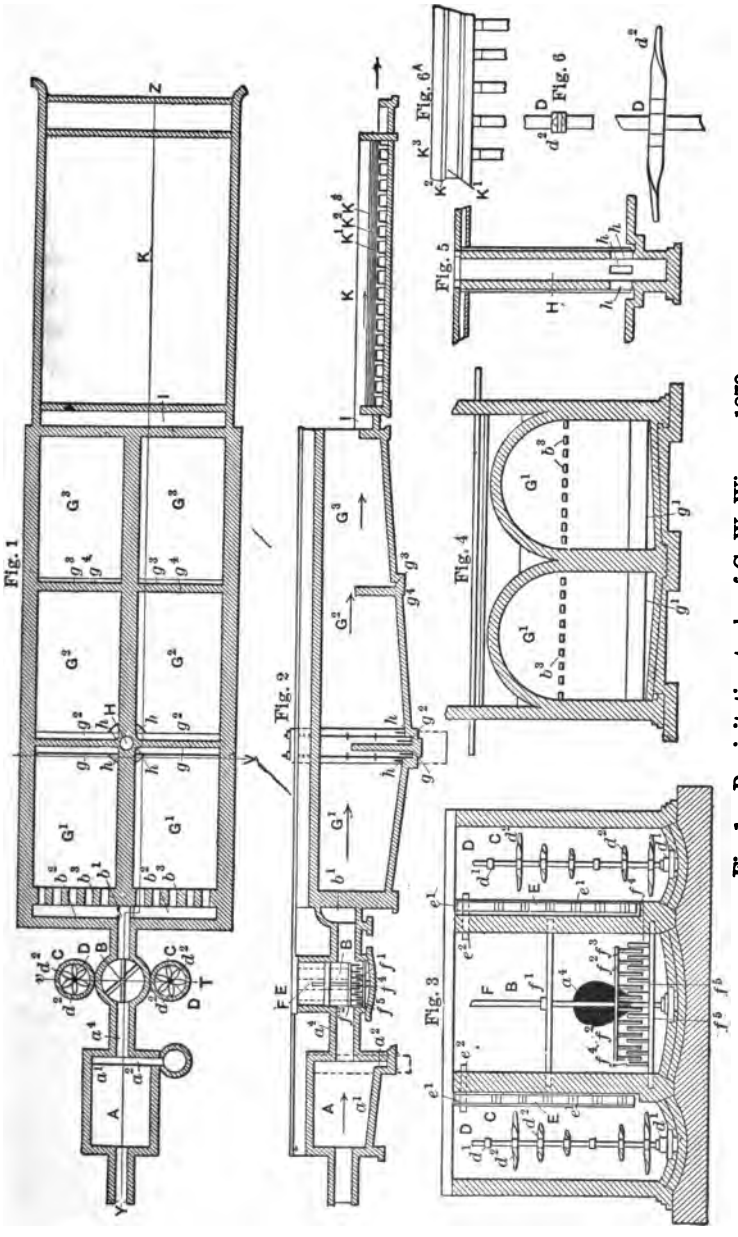

Fig. 1. Precipitation tanks of G. W. Wigner, 1870.

and with devices for mixing coagulants with the sewage. The following extracts from the specifications of this patent indicate the ideas of this inventor regarding the composition of the coagulant to be used:

My invention relates to a process for which I, in conjunction with William Cameron Sillar and Robert George Sillar, obtained a patent in the United States of America, such patent bearing date the 15th day of June, 1869. According to that process, alum, blood, clay, magnesia or one of its compounds, by preference the carbonate or the sulphate, burnt clay (otherwise known as "ballast"), chloride of sodium, animal charcoal, vegetable charcoal, and magnesian limestone were mixed with sewage, which was then allowed to flow into tanks, in which the greater part of its impurities fell to the bottom, leaving the supernatant water clear and inodorous, or nearly so.

Now, my present invention consists, first, in the addition to the substances above enumerated of sulphate of alumina, sulphate of iron, sulphate of lime, and alumina. For ordinary sewage I find the following proportions to answer well: alum, three hundred and thirty-eight parts by weight; blood, two parts by weight; clay, one thousand and ten parts by weight; magnesia, five parts by weight; burnt clay, ten parts by weight; chloride of sodium, five parts by weight; animal charcoal, fifteen parts by weight; vegetable charcoal, twenty parts by weight; magnesian limestone, one part by weight; sulphate of alumina, ninety parts by weight; sulphate of iron, two parts by weight; sulphate of lime, thirty-five parts by weight; alumina, fifty parts by weight. With respect to the blood, I would observe that it is most important to use perfectly fresh blood — i.e., blood which is drawn direct from a healthy animal as it is being slaughtered, and which is prevented from coagulating by being immediately mixed with clay, as blood so used retains for a considerable time the properties which fit it for use as a purifying agent. It may therefore be termed "live blood."

When crude alum containing any of the above-named substances as impurities is used, the said alum should be used in sufficient quantity to furnish the proper proportions of the ingredients which it contains.

The sulphate of alumina, sulphate of iron, sulphate of lime, and alumina, in either of the forms hereinbefore described, are either dissolved in water and added to the other substances above mentioned, or the said sulphate of alumina, sulphate of iron, sulphate of lime, and alumina are dissolved in admixture with the said substances, and the mixture made in either of the above ways is then added to the sewage to be purified, and mixed therewith in the proportion of four pounds of the mixture to one thousand gallons of sewage.

Figure 2 illustrates patent No. 138,250, issued April 29, 1873, granted to F. Hille. From the specifications in this case the following extracts are taken:

This invention has for its object improvements in the treatment and utilization of sewage and in the manufacture of manure therefrom.

At all sewage works, erected according to my system, I build the above-described artificial filters, because the sewage water passed through

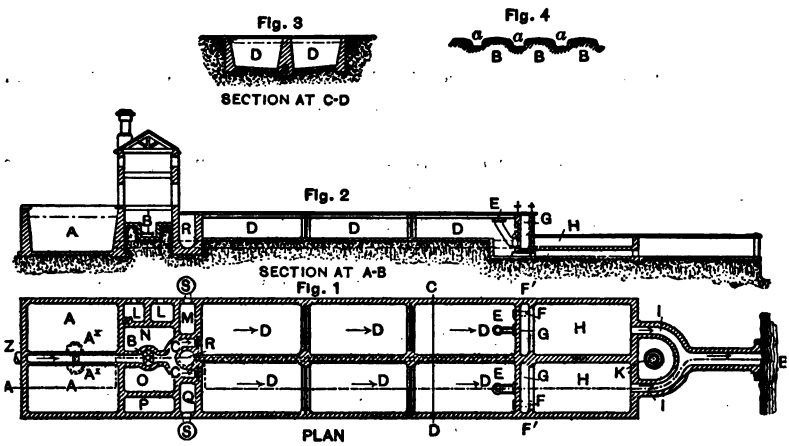

Fig. 2. Precipitation tanks of F. Hille, 1873.

these filters will be found always sufficiently pure for admission into a river, and if land for irrigation be at hand as well, then, by my system, the purified water may only be applied to the land for irrigation purposes when the season or the crops require it; and in winter time, or at any other time of the year when the ground does not require irrigation, the purified water from the deposit tanks will flow away from the filters perfectly purified.

To manufacture the sewage precipitate into a marketable manure, the sludge resulting from a second precipitation is mixed with the charcoal from the filter beds. This mixed charcoal layer on the filter beds I use for the purpose of completely purifying the liquid from the deposit tank, inasmuch as the charcoal absorbs the still remaining impurities, and thus becomes much richer as a fertilizer. The spent charcoal, after having been used twice in sugar refineries, is a cheap article, is very porous, and has great absorbing power. When the charcoal has purified the water, then it is mixed with the precipitate from the deposit tanks, and this mixture forms in itself a very good manure. But to increase the

contents of ammonia in this manure I add to it, to the extent of from eight to ten per cent, the impure salt resulting from treating the ammoniacal liquor of gas-works with sulphuric acid and evaporating it to dryness. In this manner I simultaneously defecate sewage waters and render them innocuous, and produce a manure of considerable commercial value.

The claims are:

1. The treatment of sewage with lime, the chloride of zinc, and the chloride of magnesium, substantially as before set forth, and the subsequent separation of the liquid and solid constituents by deposition and filtration.

2. The treatment of sewage with lime, and, after the deposit of the precipitate, with carbonic acid, previous to filtration, to precipitate any excess of lime, substantially as before set forth.

3. The combination of the deposit tank and the filter, by means of the self-acting floating outlet, so as to draw off the liquid at or near the surface thereof, substantially as before set forth.

4. The combination of the agitating chamber with two sets of deposit tanks and filters, so that one series may be cleansed and got ready for use without the necessity of stopping the flow of sewage, substantially as before set forth.

5. The manufacture of artificial manure by mixing together the chemical precipitate obtained by treating the sewage with the disinfecting materials and the spent filtering materials, and drying the product substantially as before set forth.

Patent No. 258,744, issued May 30, 1882, to A. S. Glover, is illustrated in Fig. No. 3, because it has been referred to in litigation as an anticipation of the now general application of bacterial fermentation to sewage purification, — a claim which the writer does not believe is at all borne out by the patent itself. Mr. Glover states:

"I am aware that sewage has been caused to flow through a series of tanks, depositing in each a portion of the matter held in suspension; but I am not aware that such tanks have ever been covered by a structure having an inclined roof or flue leading to a chimney, whereby all offensive odors and noxious gases are sufficiently removed as to be harmless."

From these illustrations, which are but a few of many that might be cited, it will be easy to recognize features so nearly

like those in septic tanks later described as to indicate the natural development of the septic tank from the ordinary precipitation tank. In a similar manner it will be easy to trace

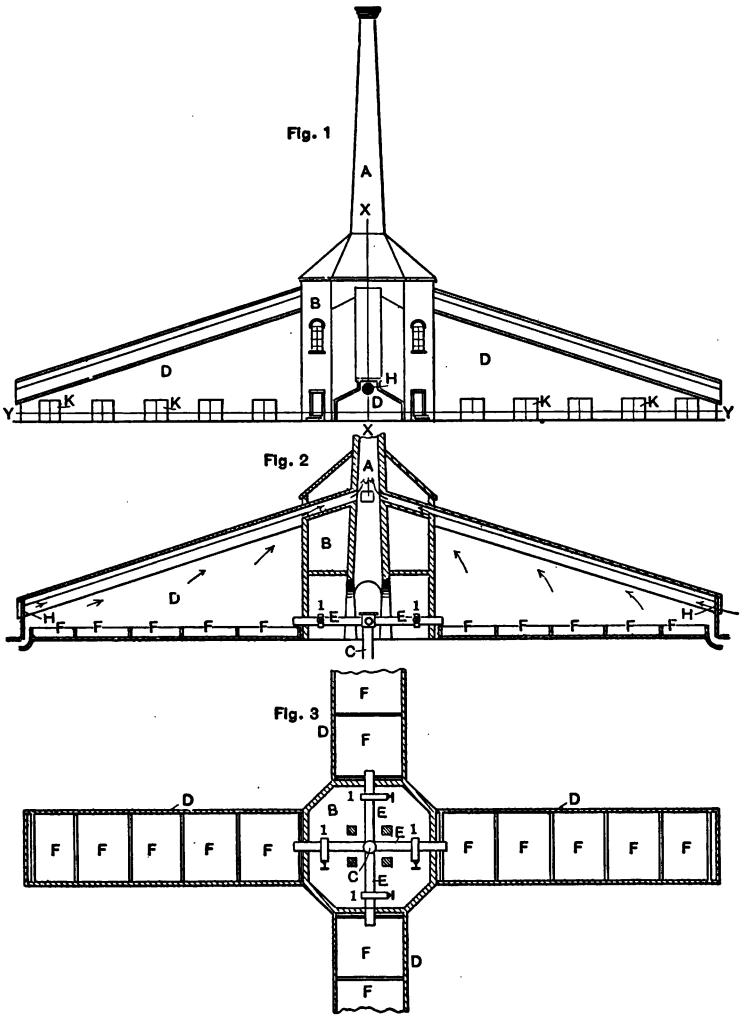

Fig. 3. Precipitation tanks of A. S. Glover, 1882.

the development of the anaërobic filters later described from the sewage strainers now about to be illustrated.

Attempts to filter sewage preliminary to disposing of the liquid have been numerous, all of the earlier ones having been made in apparent ignorance of the fact that the liquid itself

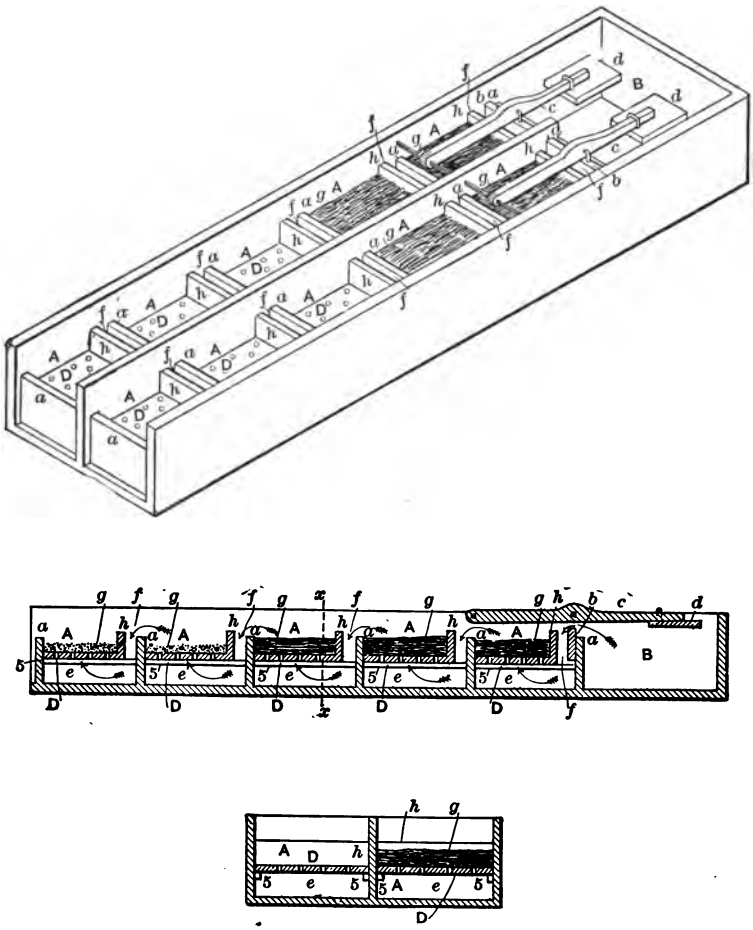

Fig. 4. Sewage strainer of B. F. Woods, 1883.

contains large quantities of matter in solution that cannot possibly be removed by simple filtration.

Figure 4 illustrates patent No. 272,997, issued February 27,

1883, to B. F. Woods. The following extracts from the specifications are of interest:

"My invention has for its object particularly to filter and purify the sewage of cities and towns in a more rapid and effectual manner than heretofore, and at the same time avoid the frequent clogging or obstruction of the filtering material or medium, which has hitherto proved such a serious obstacle to the successful performance of this work.

"The filtering material used is preferably hay or straw for the first chambers of the series, and charcoal and sand for the succeeding chambers; but any other suitable filtering material or substance may be employed."

Colonel George E. Waring's patent, No. 535,516, issued March 12, 1895, is of special interest in this connection, although it is difficult to determine whether this device should be classified as a strainer, an anaërobic filter or an aërobic filter, for it par-

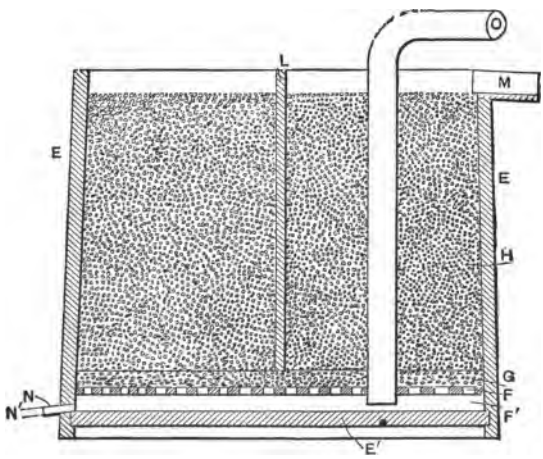

Fig. 5. Air-cleaned strainer of Col. Waring, 1895.

takes of the functions of all three. It was evidently designed as a strainer, to be cleaned intermittently by an aërobic process.

Figure 5 illustrates Colonel Waring's patent, and the following extracts are taken from his specifications:

The thorough cleansing of the filter used in a sewage disposal plant is of great importance, but, so far as I know, no process had been discovered prior to my present invention whereby such a filter could be thoroughly and economically cleansed and its refuse removed as a harmless product.

My invention relates to a new process of treating the filter whereby such desirable result is attained, and it consists in first draining the filter and then causing it to undergo an enforced oxidation such that each particle of solid will be brought into contact with oxygen, as, for example, by the introduction of air under pressure. The air or other oxygen mixture, being preferably introduced below or into the midst of the filtering medium under pressure, will be confined more or less and cause thorough bacterial oxidation, escaping comparatively slowly. After the oxidation process has been carried on for a sufficient length of time, if thought best, the filter may be washed out by running a stream of water through it, or its contents may be shoveled over, or it may be cleansed mechanically in any other desired way. The oxidation being thorough, however, the filter will be substantially in condition for immediate use, without washing.

I have used the term "filter," but this term has been used conventionally, and not with the intention of confining my invention merely to a filter in the ordinary sense of the term. The device shown is one which, in practice, retains upon the surfaces of its particles the solid or slimy particles of sewage, and my process consists in purifying such a device after the circulation of the sewage has been stopped, by the introduction of air under pressure, which causes an oxidation of the impurities and purifies the mass without mechanical assistance, except in special cases, the air being caused to pass through the device so as to carry into it a *practically inexhaustible amount of oxygen for the purpose*, and thus differing essentially from any process in which air is retained without renewal and allowed to become stagnant.

The forced aëration in Colonel Waring's system is applied only to clean the filter, and not constantly as in Lowcock's devices or some of the writer's designs, and not at frequent intervals, as may be done in contact beds. Moreover, Colonel Waring applied vastly greater quantities of air than necessary for bacterial action alone, and in doing so caused a clogging of the filter with a peaty deposit. This effect was investigated at some pains by the Massachusetts State Board of Health. The

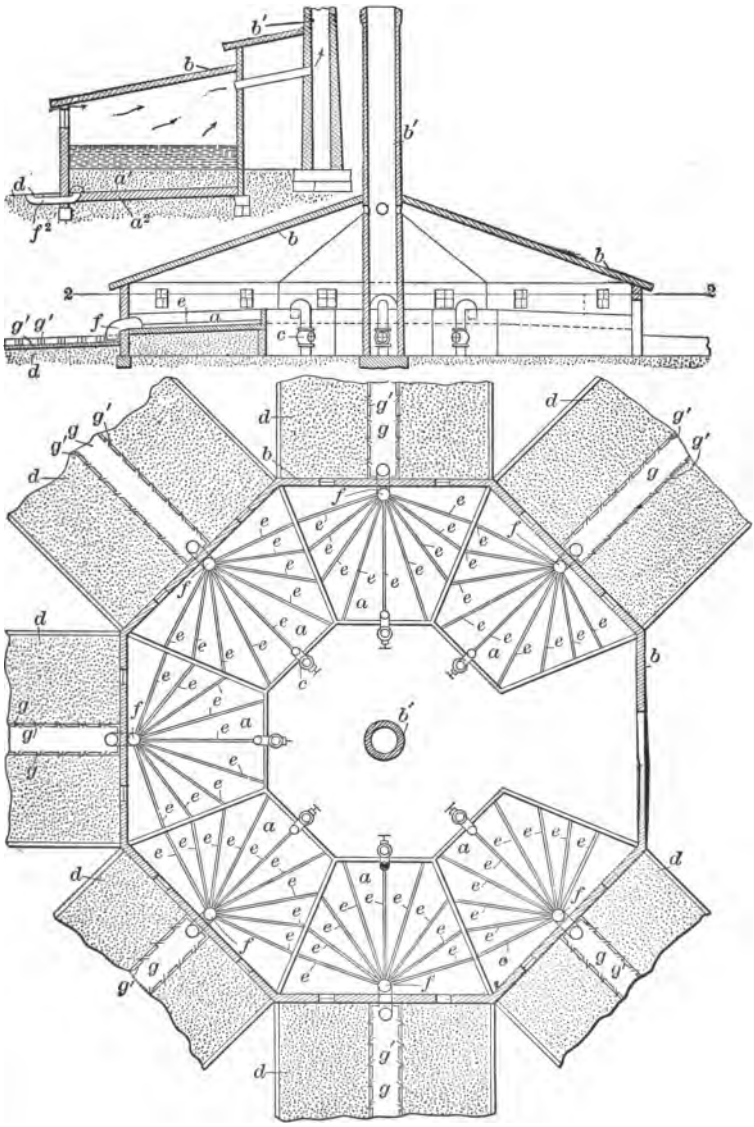

Fig. 6. Intermittent strainers of A. S. Glover, 1896.

energy of Colonel Waring, and the public interest attached to his work, render what he did in sewage purification of peculiar interest; and had he lived, it can scarcely be doubted that he not only would have kept abreast of progress in this line, but would have been one of the most prominent leaders in devising, and especially in introducing, more perfected systems of sewage purification.

As Amasa S. Glover's patent, No. 258,744, hitherto referred to, has been instanced as an anticipation of the septic tank as now understood, so his patent No. 559,522, issued May 5, 1896, has been claimed to cover the septic tank and contact bed system. The drawing of this patent is given in Fig. 6. It shows a series of sewage strainers, not unlike those used by Colonel Waring, but not provided with means for forced aëration. These devices were used in connection with a "settling tank" not shown on the drawings. Sewage was to run through one strainer, or "primary filter bed," and through it to the corresponding "secondary filter bed," continuously for twenty-four hours. Then another set of beds was to be used for twenty-four hours, and so on with each set or pair of beds. There being seven such sets, each would receive sewage once a week.

The process is distinctly a combination of simple straining and intermittent sand filtration, with long periods of rest for cleaning the filters.

ANALYSIS OF SEWAGE SLUDGE (Air Dried) *

Name of town.	Aylesbury.	Birmingham.		Bolton.	Bradford.		Coventry.		Leeds.		Leicester.	Windsor.
Process of precipitation.	A.B.C.	Lime. 1	Lime. 2	Lime and charcoal.	Lime.		Sulphate of alumina.		Modified A.B.C.	Hanson's process.	Lime.	Hille's process.
Date.	1879	1879	1879	1879	1876	1879	1877	1879	1876	1876	1879	1877
Water	12.60	12.70	13.16	14.34	8.90	6.92	14.04	10.04	9.56	16.40	11.93	11.76
Organic matter, carbon, etc.	35.60	19.19	20.04	26.18	33.75	34.53	20.58	23.09	20.82	27.92	22.18	12.06
Phosphoric acid	2.11	.40	.72	.62	.80	.73	1.56	2.07	3.64	.75	1.21	.87
Sulphuric acid	2.70	1.45	.35	.61	.64	1.74	1.32	.56	2.15	1.02	.51	.49
Carbonic acid	...	7.62	8.53	8.30	10.53	13.77	6.64	5.71	8.42	13.11	15.25	22.71
Lime	2.18	11.19	12.74	14.50	16.90	20.27	9.16	6.65	9.68	17.51	20.16	31.09
Magnesia	.18	.90	1.37	1.06	1.66	5.07	.86	.61	5.64	7.67	1.48	1.58
Oxide of iron	6.20	2.70	3.20	1.98	2.11	2.01	4.14	2.66	4.61	2.32	2.56	1.68
Alumina	6.75	2.68	2.58	2.97	3.49	3.89	4.13	5.80	7.04	6.30	1.63	2.31
Sand, etc.	33.50	41.13	37.93	29.50	21.80	10.23	37.83	42.00	31.60	7.36	22.30	14.16
	101.22	99.96	100.62	100.06	100.58	99.16	100.26	99.19	100.16	100.36	99.31	98.71
Phosphate of lime	4.61	.87	1.57	1.35	1.74	1.59	3.40	4.52	1.39	1.64	2.64	1.90
Nitrogen	1.60	.52	0.49	.61	.62	.66	.92	1.27	.66	.70	1.08	.52
Equal to ammonia	1.94	.63	0.60	.74	.76	.80	1.11	1.55	.80	.84	1.31	.63

* Rideal, p. 150.

CHAPTER V

ANAËROBIC TREATMENT OF SEWAGE

As stated in the first chapter, the biological processes of removing organic matter from sewage are of two kinds, — those which take place without the introduction of air into the sewage, and those which require the introduction of air. These two processes are quite distinct, the first resulting in the generation chiefly of marsh-gas, hydrogen, nitrogen, and compounds of carbon with hydrogen and nitrogen; while the second results in the extensive generation of carbonic acid gas, and the production of nitrites and nitrates in solution. Chemically considered, the first process is one of reduction by deoxidation, while the second is one of oxidation. Biologically the first is designated as anaërobic, and the second as aërobic, — aërobic meaning living in the presence of air.

The anaërobic process is also called the septic process, to distinguish it from the older process of precipitation of sludge by the use of chemicals, which was to a great extent antiseptic. Septic is a medical term. An antiseptic means a sterilizer, or a substance that prevents infection. Septic designates the reverse of this, and implies that the material undergoing treatment undergoes a natural process of bacterial fermentation.

The term might thus be applied equally well to anaërobic and to aërobic fermentations, but usage has confined it to the former, and, in fact, almost exclusively to the "septic tank." Although it admirably expressed a natural distinction between a new process and older processes, this word is not one that can be applied with advantage to the anaërobic process generically, and it will hereafter be used in this work in the expression

"septic tank," to denote a tank in which an anaërobic process of fermentation is in process.

If sewage be introduced into a closed receptacle, it ferments, and gives off gases which may be collected and analyzed.

The gases given off from the septic tank at Exeter are reported to be as follows:

	Per cent by weight.	Per cent by volume.
Carbonic acid, CO_2	.3	.6
Marsh gas, CH_4	20.3	24.4
Hydrogen, H	18.2	36.4
Nitrogen, N	61.2	38.6
	100	100

There was about one cubic foot of gas generated for each twenty-seven cubic feet of sewage that passed through the tank. The tank from which these gases were taken was receiving sewage constantly and discharging it constantly, so that the analysis does not represent the composition of gases that will be evolved from sewage that is confined for an indefinitely long period in the same vessel. The gas given off from a septic tank varies from 1 per cent to 8 per cent of the volume of sewage treated, or approximately one half to one cubic foot per capita per day according to concentration, temperature, and time retained. Fermentation in a closed vessel produces changes in the chemical composition of the solids and liquids as well as in the evolution of gases. In general, the process results in reducing to solution a large part of the solids in suspension, the very fine division of the solids not entering solution, and their slow precipitation in the form of sludge; but this process is made up of a large number of minor processes taking place in the various chemical substances in the sewage, and carried on through the instrumentality of very many different species of organisms.

In anaërobic fermentation the starches and sugars are among the first materials to decompose. They decompose into alcohol, lactic acid, acetic acid, etc., by processes similar to those employed to produce alcohol and vinegar commercially. The decomposition of oils and fats, on the other hand, is much more slow, and often difficult to bring about, and soap suds and grease are always troublesome to handle in a bacterial purification plant. Grease is said by Rideal to be first reduced to an emulsion by the action of ammonia derived from the decomposition of urine and other nitrogen-containing substances in the sewage. Bacteria then convert the emulsion into acids of the fatty series, and these into simpler compounds.

If the process is undisturbed for an indefinite time, all of the changes that can take place as a result of the organisms present become complete. There results a deposit of fine black sludge in the bottom of the vessel, containing the insoluble matter, above which is a clear liquid highly charged with organic matter in solution, but also charged with by-products of bacterial life which render it poisonous or toxic to the further development of bacteria, while above, or escaped from the vessel, are the gases that have been generated during the fermentation. The liquid may be clear, comparatively free from bacteria, and apparently harmless; but it will putrify again if exposed to the air; and if discharged continuously into a stream of small volume, or into a dry ravine, will produce in a short time a nuisance almost as great as would have been produced by the crude sewage itself, though possibly not so dangerous from a pathogenic point of view. It is, however, full of poisonous ferments, or enzymes.

It is the faculty of reducing to solution solids in suspension, and precipitating the insoluble portions, — or, in other words, the power of removing solids and sludge,— that renders the septic tank valuable to the sanitary engineer. That the process is accompanied by bacterial life interests him incidentally, as do the minor chemical reactions involved. Knowledge of these

also throws much light upon the extent to which the septic process should be carried before another treatment is applied.

The production of poisonous toxins in the liquid is not, however, the only way in which the retention of sewage in a septic tank for an unduly long period acts to render further treatment more difficult. Too long retention results in the formation of black sludge, which is so nearly of the specific gravity of water that it escapes from the tank and proves injurious to the operation of the filters used for subsequent treatment. This sludge has been shown by Stoddart to be in part a precipitate from matter in solution in the sewage, and not merely a residuum of original undissolved solids. It is, therefore, clear that to remove sludge from sewage by means of bacterial fermentation, the process must be conducted to a certain point and then arrested, otherwise the formation of undesirable compounds and precipitants will again render the problem of aërobic treatment more difficult than if no preliminary treatment had been applied. Before discussing the conditions required for successfully operating a septic tank, a fuller description of tanks as designed by various inventors will be of assistance in making the nature of a septic tank clear.

An excellent paper, entitled "The Antecedents of the Septic Tank," by Leonard Metcalf, Associate Member American Society of Civil Engineers, is to be found in Transactions, American Society of Civil Engineers, Vol. XLVI, pages 456 to 471, followed by a discussion by Messrs. Snow, Hering, Rafter and Owen and Metcalf, pages 472 to 481. Mr. Metcalf has collected diagrams of a number of tanks for the treatment of sewage, which are here reproduced.

Any persons interested in studying the likelihood of any proposed purification system infringing claims of patents, should begin with Mr. Metcalf's paper and the discussions. The following extract is from that paper:

Illustrations and Precedents.

The following examples, arranged in chronological order, which have come to the writer in the course of his study of the subject, are given as illustrative merely of the principles alluded to, but without any idea of their being complete, or even perhaps the best examples on record. They have been drawn from text books and the many engineering journals within reach of the engineer, and published in this country, in England and in France. Time has, unfortunately, prevented a search of continental publications other than those of the French societies.

Henry Austin's Parliamentary Report, 1852.* — In an interesting report upon the sewerage of towns, Mr. Henry Austin, of London, then Chief Superintending Inspector of the Board of Health, made some interesting recommendations for "An arrangement for separating the solid portion of the sewage from the matter in which it is conveyed, . . . with a view to the more efficient and economical working of the process;" that is, for primary sedimentation before treatment with lime and filtration.

"The great bulk of the solid matter, when the sewage comes to comparative rest in the reservoir, divides itself into two bodies; the heavier particles at once deposit themselves at the bottom, and the lighter portions collect, in a solid floating mass, on the surface. It appears to me that the chief proportion of these matters may be intercepted in the first tank, *A*, both above and below, without a filter, by a simple division, *B*, with basketwork and perforated boards in the middle, allowing the water to pass through only at a certain depth beneath the surface.

"The second tank or reservoir, *C*, need not then be so deep or so large as the first. At the end of it, filtering materials of different kinds should be arranged, through which the sewage would pass laterally: 1st, coarse screened gravel, beach or broken stones; 2d, gravel of medium coarseness; and 3d, some finer material. And there would be much advantage in having this filter, *D*, shallow and broad, rather than deep and narrow; the surface water only would pass away, and thus allow of further deposit from the main body before filtration; it would be subject to greater friction and disengagement of the solid matter and foul gases; and the filtering medium itself would be less readily clogged and would be more accessible for cleansing without removal, as it could be turned over in its place and subjected to complete washing, from a water tank, *E*, above, as often as desired. A very small area of filter so placed would be found sufficient for all practical purposes. . . .

* "Report on the Means of Deodorizing and Utilizing the Sewage of Towns." Addressed to the Rt. Hon. The President of the General Board of Health, Hon. William Monsell, M.P., by Henry Austin, C.E., London, 1857. Presented to both Houses of Parliament.

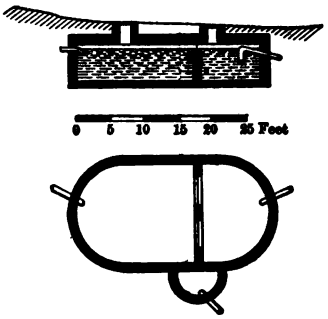

STATE HOSPITAL FOR THE INSANE.
WORCESTER, MASS., 1876.

FIG. 5.

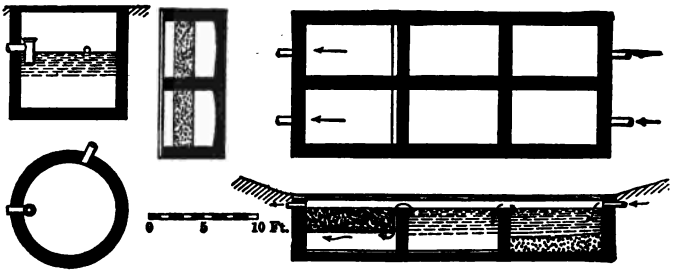

MEDFIELD, MASS., 1886.

FIG. 6.

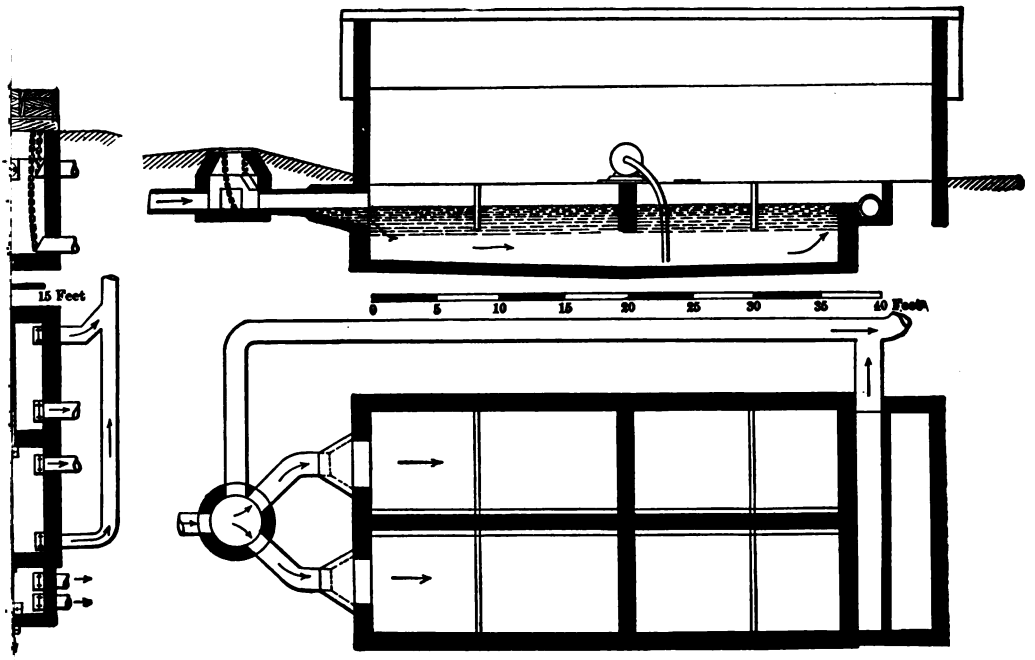

CHAMPAIGN, ILLINOIS, 1897.

FIG 12.

"It is stated as one of the results of the Manchester experiments, that the lime falls at the rate of 1½ ins. per minute. The admixture being made as the sewage flows into the reservoir at each side. I propose that it should be intercepted by a fender, that it may not disturb the main body of water, and that the discharge to the outfall should take place over a weir, allowing only a surface film of the water, from which the lime has descended, to pass over.

"The depth of this surface water passing over, and the length of the reservoir, must be, of course, determined by the quantity which has to be discharged.

"The construction shown on the plans would be sufficient for a town of about 3,000 inhabitants, and would probably cost from £250 to £300, exclusive of the excavation of the site and the fencing shown, which would depend upon locality."

School Cesspool, Derbyshire, 1858. — Dr. Samuel Rideal, in the Cantor Lectures,* on the "Bacterial Purification of Sewage," delivered in 1899, mentions the time and skill spent by architects and others upon the design of cesspools in England in the early Victorian period, when sanitary progress first drew attention to its importance; and he refers to the construction in 1858 of a very large cemented brick pit for a school in Derbyshire, into which passed continuously the sewage of 250 to 300 persons, and the drainage from a farm. Whenever the pit was full its contents were pumped out from a point near the bottom and discharged by pipes over cultivated slopes. The mixed water was said to be clear and bright, except for an occasional turbidity from the clay. At the periods of emptying, no nuisance occurred, though sometimes a faint odor was noticed when the wind was in the right direction.

Settling Tank at Hospital for the Insane, Worcester, Mass., 1876. †— This settling tank (shown in Fig. 5, Plate XI), designed for an ultimate capacity of 600 persons, is of particular interest, as making use of the submerged inlet and outlet, diaphragm wall with punched screens and screen weirs, and the masonry roof. It forms a part of the broad irrigation system in use there.

Mouras' Vidange Automatique, 1881. — Mouras' Automatic Scavenger has been so frequently referred to and discussed in recent engineering literature as to make it unnecessary here to do more than give a few references‡ to it and briefly outline its action.

The scavenger was described by Abbé Moigno, editor of the *Cosmos les Mondes*, as being a metal receptacle, hermetically sealed, continuous in working, absolutely inodorous, which rapidly transforms all it receives

* *Journal*, Society of Arts, London, January 16th, 1899, p. 683.

† Rafter and Baker's "Sewage Disposal in the United States," p. 456.

‡ *Cosmos les Mondes*, December, 1881, January, 1882, and January, 1883.

into a homogeneous fluid, only slightly turbid, free from deposit of any kind, and almost devoid of smell. Its general arrangement is shown in Plate XI, Fig. 2, and needs no further comment.

An interesting account of the application of the scavenger is given in the *Minutes of Proceedings* of the Institute of Civil Engineers, Vol. LXVIII, page 502, 1883–84. According to this, the scavenger was placed at the works of Mr. Herzog at Logelbach in the middle of the year 1883. It had a capacity of about 16,800 U. S. galls., and was used for three water-closets frequented by 150 people, the inflow being fairly constant in volume. The inlet and outlet pipes were submerged, of the form prescribed by the inventor, by which the vessel was hermetically sealed and the phenomena of oxidation practically prevented. The author states that complete putrefaction took place, by which all solid matters were dissolved in the space of thirty days.

Professor Rideal, commenting upon the size of the tank, says:

"It is not so large as to be impossible with ordinary sewages, but the fact that the effluent from such a tank was not sufficiently purified without further nitrification, prevented the automatic scavenger from being more generally adopted."

It appears to have been used for some years, however, in Paris, until the passage of the act requiring the discharge of all sewage direct into the mains, without preliminary treatment of any kind.

Mouras' scavenger is also described in a letter * by Scott Moncreiff, in which he says, referring to the later septic tank of Donald Cameron:

"It is nothing new, and has been in use by Beazley and Burrows, Architects, of Victoria Street, Westminster, for the last seven or eight years, in their ordinary practice of draining country houses."

School for Boys, Lawrenceville, New Jersey, 1882.† — A double receiving and settling tank (Fig. 3, Plate XI) for use at Lawrenceville, N. J.,

---

Minutes of Proceedings, Institution of Civil Engineers, Foreign Abstracts: Vol. lxviii, pp. 350–352, 1881–82; Vol. lxxii, p. 359, 1882–83; Vol. lxviii, p. 502, 1883–84.

"Assainissement des Villes par l'Eau, les Egouts, les Irrigations," par M. A. Mille.

"Sewage and the Bacterial Purification of Sewage." By Dr. Samuel Rideal, p. 165.

Journal, Society of Arts, London, p. 710, 1899. Abstract by Rudolph Hering, M. Am. Soc. C. E.

Journal, Association of Engineering Societies, Vol. xxiv, February, 1900. Article on the Septic Tank, by Professor Leonard P. Kinnicutt.

Engineering News, April 15th, 1882, and reprint of the same, accompanied with letter of Kenneth Allen, M. Am. Soc. C. E., May 12th, 1898.

* *Engineering* (London), September 25th, 1896, p. 407.

† Rafter and Baker's "Sewage Disposal in the United States," p. 511.

in conjunction with a sub-surface irrigation system, was designed in 1882 by J. James R. Croes, President, Am. Soc. C. E. Its capacity was planned for 400 persons, though it was used by only 180 for some time. The sewage at first amounted to about 6,000 galls. per 24 hours, though later, in 1893, it reached 20,000 galls. per 24 hours. The joint capacity of the two chambers amounted to about 11,000 U. S. galls. The sewage flowed in each septic tank down through one long central passage-way, back through the next, and out through the outside passage into the pump well, from which it was periodically discharged by a pulsometer pump into a sub-surface irrigation system. The inlets and outlets between the chambers were submerged, with a weir at the end of the last channel, over which the sewage fell in a thin sheet into the pump-well below. The chambers were ventilated by a flue to the boiler house.

This plant, built in 1882, embodied to a striking degree the very processes and devices now being used by others under claim of novelty, and covered by recent patents.

Massachusetts Reformatory, Concord, Mass., 1883.* — A sewage disposal system, comprising sedimentation, storage and broad irrigation, was designed for this institution by William Wheeler, M. Am. Soc. C. E., in 1883. This system is of interest as illustrating the use of a small sedimentation and macerating chamber for the separation and liquefaction of the solids, submerged inlets and outlets, a large storage chamber to contain approximately 14 hours' night flow of sewage, from which the liquid was pumped daily to a point approximately 1 ft. from the bottom. The tanks were also covered with a masonry roof, and provided with artificial ventilation to the chimney.

Edward S. Philbrick, 1883. — In an interesting article† on "The Disposal of Sewage by Sub-Surface Irrigation in Suburban Residences," Mr. Philbrick suggested the advisability of sedimentation, maceration and intermittent application of the sewage in sub-surface irrigation systems, and described a tank for accomplishing this purpose. Its construction is so clearly shown in Fig. 4, Plate XI, as to make further description unnecessary. Mr. Philbrick's discussion of the operation of the tank previously alluded to is excellent. The use of similar tanks has also been suggested in the more recent works of the late Colonel George E. Waring, Jr., and Mr. William Paul Gerhard.

In a later article‡ Mr. Philbrick, replying to an open letter asking about the dimensions for a flush-tank and settling basin for a hospital containing twenty-five beds, suggested the use of tanks 5 ft. in diameter by 5 ft.,

* See Massachusetts Public Documents, 1883, No. 13. Also Rafter and Baker's "Sewage Disposal in the United States," pp. 468–475.

† *The Engineering Record*, May 10th, 1883.

‡ *The Engineering Record*, Vol. 8, p. 444.

in depth, which would have given approximately 8 or 10 hours' sedimentation and septic action.

Medfield, Mass., 1886.* — The "settling and filtering tanks" shown in Fig. 6, Plate XI, were designed for the town of Medfield, Mass., by Eliot C. Clark, M. Am. Soc. C. E.†

Professor L. Paglianl, 1891. — At the VII International Congress of Hygiene and Demography, held in London in 1891, L. Paglianl, Professor of Hygiene, and Director of the Public Health, at Rome, Italy, presented a paper on "The Application of a Reservoir Interceptor, made on the Type of Mouras' Fosse, and of a Peat Filter for Sewage in the System of Separate Sewerage."

In this, he says: Considerations of economy made the *tout à l'égout* system impossible, and compelled the adoption of "a good dividing system," which should "separate the soluble or emulsionable materials of the privy . . . from the solid and heavy parts," and thus make possible the use of small-sized sewer pipes without danger of clogging. The tank is a type of Mouras' scavenger, made of cast iron or cement, as shown in Fig. 7, Plate XI.

"Experience has proved that such a reservoir can work properly without any inconvenience for a very long period, and perhaps indefinitely, when to it is supplied an abundant flowing of water; but if the water be in want, it may happen that the floating layer thickens so in the course of a few months as to make difficult the further flowing of the successive sewage. In this case, however, to put the apparatus to work again is sufficient to draw off the reservoir some liquid at one-fourth its height from the bottom by means of a pipe; the surface of the liquid with its floating solid layer is thus lowered," and the trouble remedied by further dilution. No deposit occurs in the pipe system.

"To filter the dissolved sewage that is drawn from the reservoir I resorted to peat with the best results."

He then describes his and Professor Monari's experiments with peat as a filtering medium, and mentions several plants of this character designed by him, notably in Rome, Turin and Massa.‡

Gardner, Mass.; Marlboro, Mass., 1892. — Figs. 11 and 8, Plate XI, illustrate the tanks at Gardner and Marlboro, Mass., for description of which the reader is referred to Rafter and Baker's "Sewage Disposal in the United States."

* Rafter and Baker's "Sewage Disposal in the United States," pp. 490–493. Also *Engineering News*, and *The Engineering Record*.

† A detailed description of these tanks may be found in *The Engineering Record*, May 10th, 1883.

‡ Since making the above abstract of Professor Paglianl's work, the writer has noticed a short article in *The Engineering Record* of March 30th, 1901, upon "An Early Example of Combined Septic Treatment and Filtration of Sewage.

Wellesley College, Mass., 1892, *and Massachusetts Agricultural College, Amherst, Mass.*, 1893. — Figs. 9 and 10, Plate XI, are of interest chiefly as illustrating certain types of tanks. The former discharges intermittently into sub-surface irrigation pipes; the latter upon irrigation beds.

Champaign, Ill., 1897. — In Fig. 12, Plate XI, is shown the Champaign, Ill., tank, designed by C. N. Talbot, M. Am. Soc. C. E. Of it, Professor Talbot says: *

"This septic tank has been in operation since 1897, although it was designed in 1895. It was an outgrowth of the writer's experience with the Urbana septic tank, which he constructed in 1894. The ideas for this came from a study of various settling tanks connected with sewage disposal works, the action of large cesspools, and the 'automatic vault cleaner' of M. Mouras, described in *Engineering News* of April 15th, 1882. The Urbana tank was covered with plank and earth, and had a submerged outlet. Observation on its action proved that a material purification of the sewage was made, and the efficiency of the tank has been quite satisfactory. It may be noted that the development of the septic tank process in Urbana and Champaign was made at about the same time as that at Exeter, England, the two being entirely independent of each other, though along much the same lines. . . .

"It may be well to say that this system may be used without infringing on any patents. While a company claims to have a patent, the principles of darkness, non-ventilation, submerged outlet, and other features of the septic tank have been in use so long that they certainly are not patentable."

This brings us to the present period, and to the development of the modern septic tank and bacterial contact systems of sewage disposal. Some excellent and very suggestive studies have been made in this field within the last decade, and the actual processes of Nature are probably far better understood to-day than formerly. Many of the professedly new principles and devices used are covered by patents, both at home and abroad; yet a comparison of the actual methods used to-day with those of years ago, regardless of new interpretations or explanations of the forces involved, discredits at least some of the claims of novelty now being advanced.

Enough has been said, however, to indicate that the following processes and operations are old in application in the field of sewage disposal, and hence that their use, *per se*, cannot constitute an infringement of patent rights:

1. — Sedimentation, as shown by the work of Mr. Austin, Dr. Tanner, and many others referred to;

* *Engineering News*, August 17th, 1899, p. 112.

2. — Reduction and liquefaction of the solids, soaps and fats by bacterial or anaërobic action, hydrolysis, fermentation, maceration, etc., by slow passage of the sewage through a tank or chamber, as shown in the different types of tanks and modified cesspools used in Paris and the world over, the Mouras' automatic scavenger, Paglianl's tank, Philbrick's tank, Croes' Lawrenceville plant, Talbot's Urbana and Champaign tanks, the Amherst tank, and many others;

3. — Decantation of the liquid and liquefied portions of the sewage from the tank without disturbing its contents or the surface blanket or sludge deposit in the bottom, by means of the submerged outlets, as shown by the work of Mr. Austin, Dr. Tanner and others, Mouras' automatic scavenger, Paglianl's tank, Philbrick's tank, Croes' tank, Wheeler's Massachusetts Reformatory tank, and many others cited;

4. — Hydraulic sealing or trapping by submerged inlet and outlet, as shown by numerous examples cited;

5. — Roof or covering, as shown by various examples cited;

6. — Artificial ventilation, as shown by certain of the tanks used in Paris, Wheeler's Massachusetts Reformatory storage chamber, Philbrick's tank, Croes' tank, and others;

7. — Absence of ventilation and exclusion of light and air, as in Mouras' automatic scavenger, Paglianl's tank, and others;

8. — Removal of the sludge without draining the tank, as in Paglianl's tank, the Amherst tank, and others;

9. — Overflow and aeration by weir, as shown in Austin's tank, Croes' Lawrenceville tank, and others;

10. — And many other processes and devices of lesser importance.

To discuss the recent work, however, is beyond the purpose of this paper. The writer has aimed only to present, to those interested in the subject, certain facts, gathered by him in his investigations, which seemed to have an important bearing upon some of the more recent claims for novelty, as well as upon certain old patents now being interpreted in the light of modern scientific development, and in a way never dreamed of by their authors.

The patents issued in America for septic tanks, or for devices in which the design of a septic tank is an important element, are described and illustrated in the pages following:

Patent No. 634,423, issued October 3, 1899, to Donald Cameron and Arthur J. Martin, of Exeter, England, is the celebrated patent for the Cameron Septic Tank. It contains 22 claims, covering various combinations of certain elements. This patent

NOTE. For decision of U. S. Circuit Court of Appeals sustaining validity of process claims of this patent, see *Engineering Record*, Jan. 25, 1908.

has been represented to cover the entire field of sewage purification by anaërobic and aërobic treatment. Three claims are here selected to indicate the ideas of the inventor regarding the essential requirements of a septic tank.

" 1. The process of purifying sewage, which consists in subjecting the sewage, under exclusion of air, of light, and of agi-

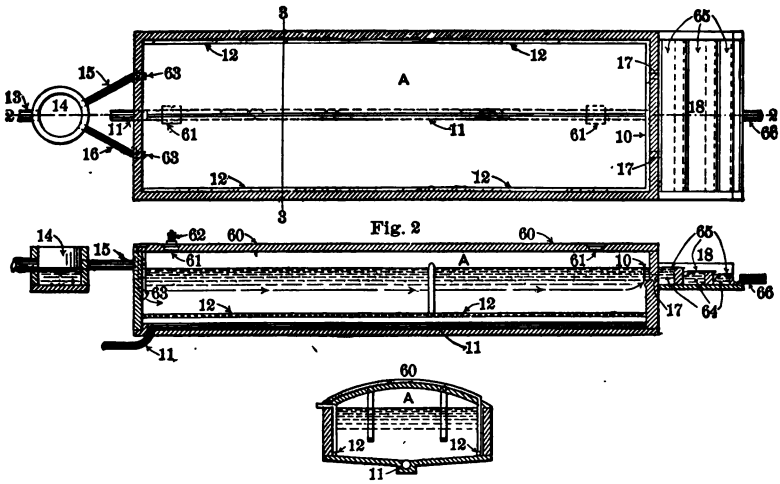

Fig. 7. Cameron septic tank, 1899.

tation, to the action of anaërobic bacteria until the whole mass of solid organic matter contained therein becomes liquefied, and then subjecting the liquid effluent to air and light."

" 12. In an apparatus for purifying sewage, the combination of a septic tank, an inlet occupying the greater part of the width of said tank, and an outlet extending across the greater part of the width of the tank and disposed above the bottom of the tank and below the normal water-level thereof, said outlet comprising a pipe having a longitudinal slot therein extending the greater part of its length."

" 21. The process of liquefying the solid matter contained in sewage, which consists in secluding a pool of sewage having a non-disturbing inflow and outflow from light and agitation until

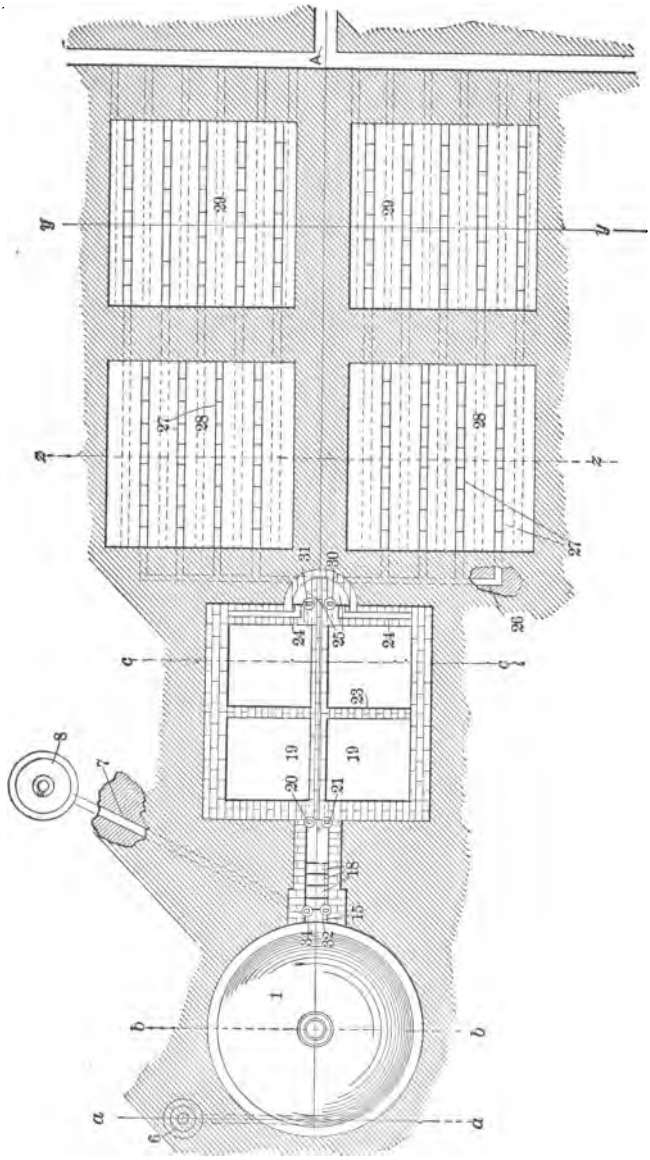

Fig. 8. Septic tank and filter beds of O. W. Pfouts, 1900.

a thick scum is formed on the surface thereof and a mass of micro-organisms has been developed of a character and quantity sufficient to liquefy the solid matter of the flowing sewage, the inflow serving to sustain the micro-organisms, and then sub-

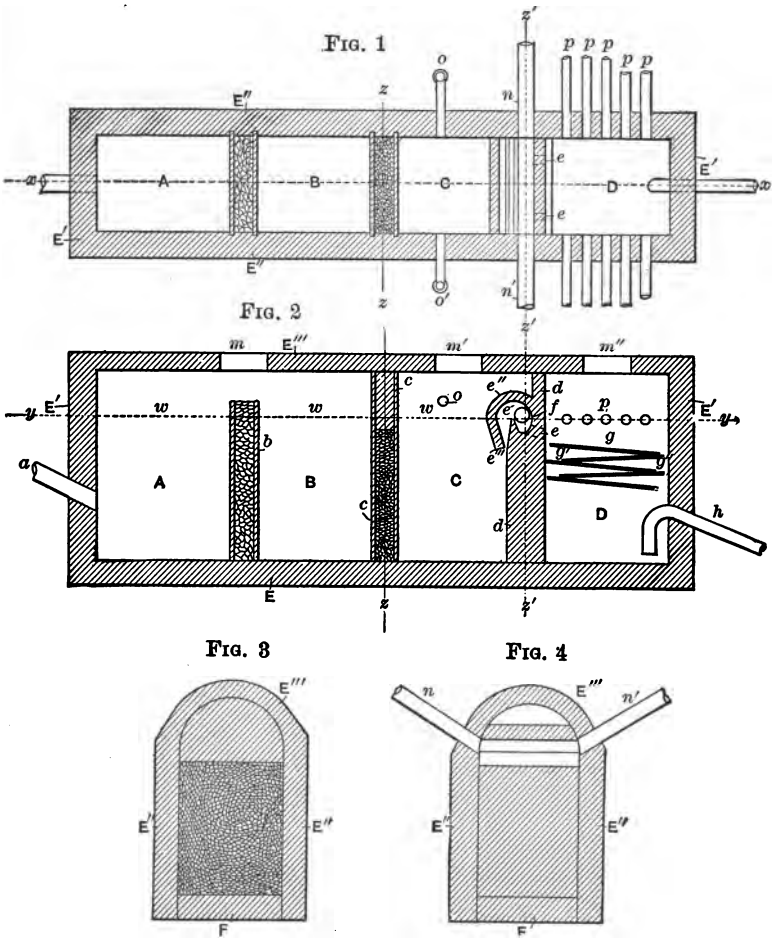

Fig. 9. Septic tank of A. J. Provost, Jr., 1902.

jecting said pool, under the cover of said scum and under the non-disturbing inflow and outflow, to the liquefying action of

the so cultivated micro-organisms until the solid matter contained in the flowing sewage is dissolved."

Patent No. 659,452, issued October 9, 1900, to O. W. Pfouts, of Alliance, Ohio, is of especial interest in this connection, because the inventor sought to make the inflow into the tank cause as much disturbance as possible, instead of as little, as in the Cameron patent. The claim of interest in this connection is:

"8. In a sewage disposal system, a septic tank, a sewage pipe or pipes leading into said septic tank at a point or points at one side of the diameter of said septic tank whereby a rotary motion is imparted automatically to the sewage and a vertical pipe centrally located in the septic tank, substantially as and for the purpose specified."

Patent No. 699,345, issued May 6, 1902, to Andrew J. Provost, Jr., of Brooklyn, N.Y., is of interest in that it shows an attempt to retain the larger solid particles of sewage in one portion of the tank. Claims 1 and 3 are indicative of the inventor's purpose.

"1. In an apparatus for purifying sewage by bacterial action the combination of a first compartment for the reception of the sewage from the sewer and adapted to anaërobic bacterial growths, a second compartment likewise adapted and a pervious partition between said compartments, adapted to detain in the first compartment a given size of solid constituents of the sewage and to pass into the second compartment such solid constituents of lesser size, substantially as and for the purposes described."

"3. In an apparatus for purifying sewage by bacterial action the combination of a compartment adapted to the growth and action of anaërobic bacteria and to the reception and partial detention of the sewage from the sewer, a second compartment likewise adapted to the growth and action of anaërobic bacteria, a filter connecting said two compartments and adapted to resist the passage of a certain size of particles of the solid constituents

of the sewage and to permit the passage of all smaller sizes, a third compartment adapted to the growth and action of faculative bacteria and a filter connecting said last-mentioned com-

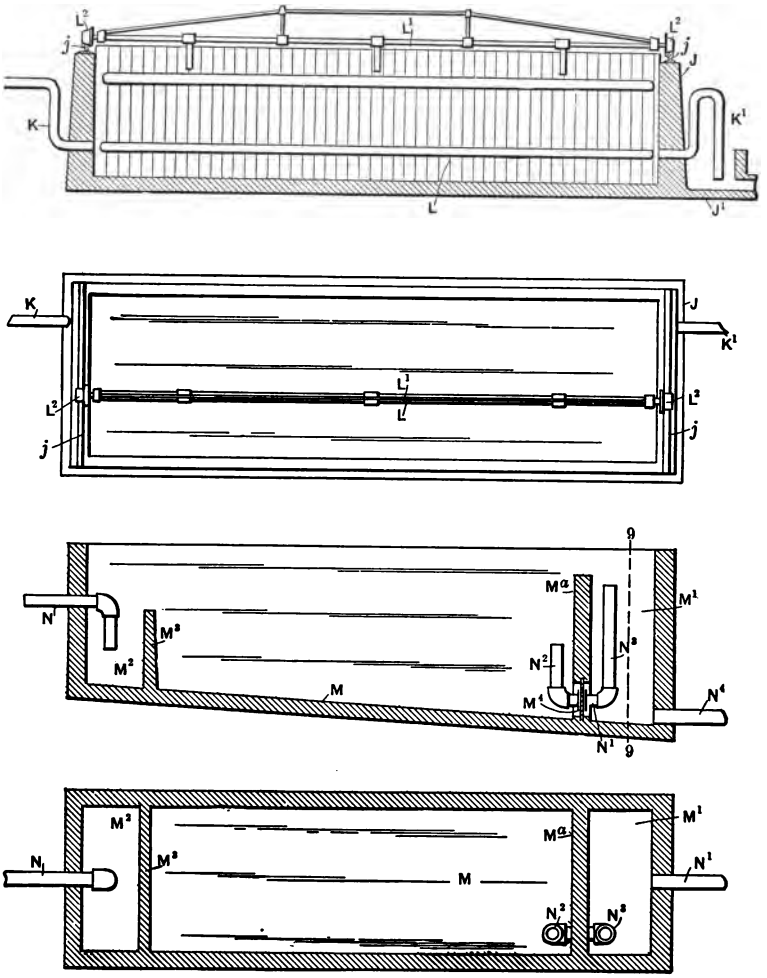

Fig. 10. Septic tank of John W. Alvord, 1904.

partment with the aforesaid second compartment and adapted to contain substantially all solid constituents in said second compartment, substantially as and for the purposes described."

Patent No. 762,466, issued June 14, 1904, to William L. Church and George Everett Hill, of New York, is of interest in this connection as showing appreciation of the fact that the dissolution of sludge is facilitated by agitating it, as stated in claim 11.

"11. That improvement in the art of sewage disposal which consists in subjecting a body of sewage containing a relatively large portion of unreduced solids to a succession of violent mechanical disintegrating actions as an accessory to bacterial conversion."

Patent No. 770,490, issued September 20, 1904, to John W. Alvord, of Chicago, Illinois, is of interest as an attempt to obtain uniform septic action by varying the capacity of the septic tank as the quantity and character of the sewage varies, as instanced in claim 3.

"3. The improvement of the process of purifying sewage by septic action, which consists in continuously delivering the sewage to and discharging it from the unrestricted receptacle or receptacles in which the septic action takes place, and varying the capacity of the receptacle or receptacles to accord with the proper rest or quiescent periods for sewage or varying characters and volumes and with varying influencing environments whereby the sewage is subjected a sufficient length of time to the septic action of the bacteria, but not sufficiently long to injuriously affect the bacterial action."

Patent No. 778,506, issued December 27, 1904, to W. A. Reid and E. J. Hanley, of St. Louis, Missouri, is of interest as one design by which the principal objects aimed at by Cameron are apparently secured without infringement of the Cameron patent.

Sewage entering a tank contains solid matter suspended in it and solid matter floating on its surface. The suspended matter consists of sand, silt, dust, and organic matter, more or less finely divided. The denser and larger particles sink at

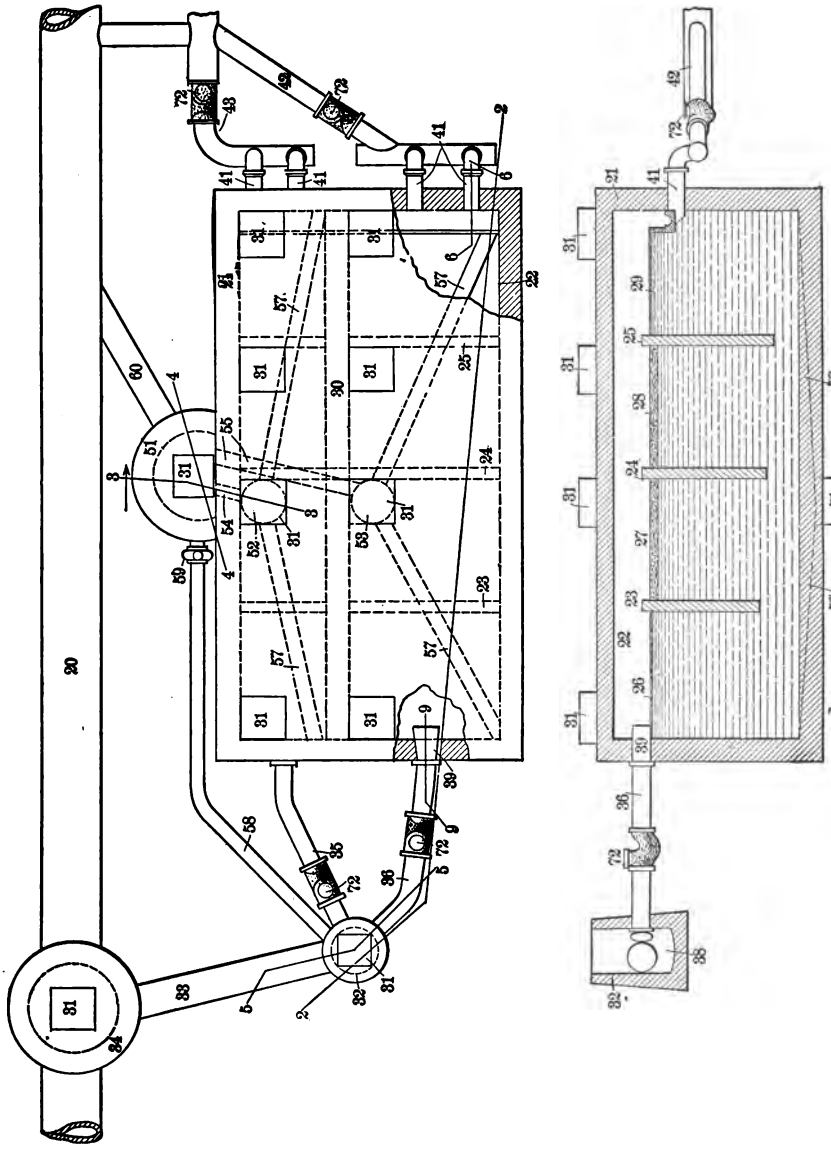

Fig. 11. Septic tank of Reid and Hanley, 1904.

once to the bottom; the finer and lighter ones subside slowly, and form a layer of material in process of decomposition. The floating matter remains on the surface until the gas contained in it, causing it to float, is liberated, and smaller solid particles break away and sink to the bottom. The organic material on the bottom decomposes, with the generation of gas, the gas becomes entangled in the mass of solid, and gives buoyancy to it, until pieces break off and rise to the surface. Thus the evolution of gas constantly carries particles of solid matter from the bottom of the tank to the top, and the escape of the gas allows the solids to sink back again to the bottom. If uninterrupted, this would continue until no more gas was evolved.

As stated previously, the character of the sludge formed varies according to the time that the materials remain in the tank. The solids that fall quickly to the bottom are, of course, retained in the tank for a much longer period than the liquids which may pass directly through; and the particles of sludge most nearly of the specific gravity of water escape first from the tank. In a tank of the design shown in the Cameron patent, the sludge naturally spreads out so as to occupy the entire area of the tank, in a layer of approximately level surface; and the lighter portion constantly precipitated from the liquid, is carried through the outlet pipe to the filter beds. Sludge formed in such a tank never becomes dense. It can be removed by pumping, is black in color, and contains 95 per cent or more by weight of water. It can be pressed into cakes containing 25 per cent to 50 per cent of water by weight. The sludge cakes have no commercial value, though many attempts have been made to market them. For the most part, however, the sludge is permitted to pass out of the tank to the filter beds, especially in small works, and the trouble of disposing of what is not liquefied in the tank is transferred to the beds.

The close approach of the specific gravity of sludge to that of water, and the fine state of division of its particles, make it

always difficult to retain this material in the tank, and especially so if the tank is constantly kept in a condition of unrest by the fermentation of sewage. Accordingly, the sludge, when reduced to a very fine condition, is often carried out of the tank in suspension in the liquid, although the operator of the plant supposes it dissolved. This explains the non-accumulation of sludge beyond a certain depth in tanks that have long been in use, although experiments conducted in receptacles in which there is no flow indicate that the sludge does not disappear in time. This hypothesis is also confirmed by an examination of the contents of filter beds into which septic tanks discharge, and by experiments of many engineers interested in sewage disposal.

The larger lumps of organic matter take longer to decompose than the smaller, though they eventually are consumed, while the solid inorganic particles that do not decompose at all should be removed from time to time so as not to diminish the capacity of the tank.

A septic tank should therefore be designed to accomplish the following objects:

1. Precipitate the inorganic solids where they may readily be removed without inconvenience or offense.

2. Retain the grease and the heavier particles of organic matter in the most active part of the tank as long as possible, where they will be constantly exposed to ammonia.

3. Provide for the precipitation and the retention of the sludge, and avoid its passing out with the liquid effluent.

4. Accomplish the above without retaining the sewage in the tank long enough to render it "stale," — that is, difficult to oxidize by a subsequent treatment, with the utmost economy in the use of materials of construction, and without causing voluminous precipitation of secondary sludge.

This last object involves determining the size of the tank, and the time that sewage should be retained in it. If sewage were

all alike, a few simple experiments would furnish data sufficient to enable us to determine the size necessary to treat any number of gallons per day; but sewage is not all alike either in the character of the impurities contained, or in the quantity of impurities per gallon. Questions arise such as: Shall we make the tank proportionate to the quantity of liquid, or to the quantity of impurities? If we make it proportionate to the quantity of liquid, we assume that it will take each particle of liquid a certain number of hours to pass through the tank. This is the method usually adopted; but it calls for unreasonably large tanks where the sewage is dilute, and it is based upon the supposition that the liquid is the essential part undergoing treatment in the tank, while, in matter of fact, the solids are what the tank is designed to treat. On the other hand, unless the tank is carefully designed to avoid it, a short period of rest of the liquid in it will not be sufficient to prevent the passage of undissolved solids through the outlet.

Selection of a design must precede determination of dimensions, as some designs will not permit of economy in size, while others will. Where an installation must be built for an institution not large enough to justify preliminary experimentation, the tanks must be made large enough to cover possible requirements, but so constructed that staling of the sewage is prevented by adjustment after construction. For large cities it would appear better to build a portion of the plant first, and to determine the precise dimensions of the rest of the work after a portion was in use.

We may analyze the designs of septic tanks illustrated in patent office drawings into the following elements:

1. *A tank* of any convenient form, capable of holding a given quantity of sewage, and provided with an inlet and an outlet through which sewage flows continually. The patents give very little light regarding dimensions. Where tanks are of rectangular form, the most economical depth, or the most

economical relation between depth and other dimensions, is not indicated.

2. *Devices for distributing the liquid* across the tank at the entrance, and for collecting it from all points across the tanks at emergence. These are made the subject of many claims in the Cameron patent, while in others they are entirely disregarded. If the tank is very many times longer than it is wide, such devices are evidently of little use. Some designers regard them as injurious, a local mixing of the sewage at entrance with that already in the tank being desired.

3. *Devices for preventing scum* or "mat" and grease from flowing from end to end of the tank, and devices for *preventing the flow of sludge* from end to end of the tank. There are various kinds, from simple "scum boards" on top and baffle walls below, to complete subdivision of the tank into several compartments, in the first of which bacterial decomposition of solids is the chief object, and in the last precipitation of sludge.

4. *Devices for regulating the time* sewage takes to flow through the tank, by varying the capacity of the tank, or by fixing the quantity of sewage admitted to the tank per hour.

5. *Devices for facilitating the dissolution of sludge by stirring* or otherwise agitating it, and devices for *removing the sludge* and other sediment from the tank.

Assuming that the object of a septic tank is to remove as large as possible a proportion of the solids in suspension in the sewage, and to leave the liquid as little affected by the process as possible, so that it will readily yield to subsequent aërobic treatment, the septic tank should be made no larger than is necessary to secure the precipitation of the solids between the inflow and outflow pipes, and to allow them time to decompose at the same rate as that at which they enter. In rectangular tanks of ordinary designs, the size required for this is that having a liquid capacity of approximately one half the daily flow of sewage. If the object is to remove as large as possible a proportion of

the organic matter both in solution and suspension, the tank must be much larger, but the effluent will not yield as readily to aërobic treatment. In any large system there should be a number of septic tanks arranged so that as many or as few as desired may be used, to secure the results most favorable for the subsequent treatment employed. Owing to the great difference in local conditions, such as character of water supply, strength of sewage and presence of chemical bodies peculiar to local industries, no municipal sewage purification works can be built upon economical lines without some leeway being allowed the designing engineer for experimentation and adjustment after at least a portion of the works have been operated for some months, unless expensive experimentation is indulged in before any works intended for permanent use are undertaken.

The following analyses of the sewage and the effluent of the experimental septic tank at Lowell, Mass., indicate the purification effected on an ordinary sewage and on a concentrated sewage in the same tank:

CONCENTRATED SEWAGE PASSING THROUGH TANK IN 49 HOURS, 1900.

	Tank supply.	Effluent.	Per cent change.
Temperature . . . . . degrees.	57	55	...
Free ammonia	4 .43	5 .90	+33
Albuminoid ammonia	2 .52	.55	−78
Chlorine	10 .41	9 .72	...
Oxygen consumed	13 .02	3 .85	−71
Bacteria per c.c.	8,104,000	1,182,400	−85

RAW SEWAGE PASSING THROUGH TANK IN 24 HOURS, 1898.

	Tank supply.	Effluent.	Per cent change.
Temperature . . . . . degrees.	...	57	...
Free ammonia	4 .44	4 .86	+10
Albuminoid ammonia	.79	.41	−48
Chlorine	9 .21	10 .11	...
Oxygen consumed	4 .	2 .29	−43
Bacteria per c.c.	2,000,000	324,500	− 84

Figures give parts per 100,000.

This tank gave off from 4 to 8 gallons of gas per 100 gallons of sewage, according to the time of year.

In a paper read before the Royal Institute of Public Health, Mr. F. Wallis Stoddart gives a summary of the results of experimentation by him upon the best size of septic tank to use in connection with his percolating filters at the Horfield Works at Bristol. With sewage of strength indicated by a dry weather flow of only 15 gallons per capita, — more than twice as strong as in ordinary municipal sewage in Great Britain, — the best results were secured when the septic tank was divided into four compartments of about equal size, and the rate of flow was 20 gallons per day per cubic foot of tank capacity. "Orthodox" British practice is 6¼ gallons per day per cubic foot of tank capacity.

The following is extracted from the above-mentioned paper:

This tank is divided into compartments by submerged walls, and is fitted with boards, one function of which is to direct the flow of sewage downwards, so as to insure the absence of any direct current from inlet to outlet.

Now, if the sludge consisted only of the residue of original solids, it would naturally accumulate first in the compartment nearest the inlet, and progressively in the later compartments as the earlier ones became filled. But this is not the case when this tank is worked at the orthodox rate of 6¼ gallons per day per cubic foot. It is then found, after some weeks, when the septic action is well established, and the normal formation of scum has taken place, that there is as much or more deposit in the last compartment as in the intermediate ones, though these are not full. Further, the character of the deposit varies in the compartments, for whereas that at the inlet end of the tank is a pasty mass of sewage solids more or less broken down, that at the outlet end is a black, unctuous silt, characterized by the presence of a large proportion of ferrous sulphide — in fact, the identical material already alluded to as collecting in that portion of the plant which follows the tank when the latter is underworked. It is a direct chemical precipitation brought about by interaction between the iron and other bases present in all sewages, and the soluble sulphides and carbonates produced in the course of putrefactive change. The constitution of this material is, of course, not constant, but the following analysis fairly represents its composition: Water, 77.30 per

cent; volatile and organic solids, 5.15 per cent; fixed mineral solids, 17.55 per cent.

Of the solids, from 4 to 5 per cent consists of ferrous sulphide, a substance which, when slowly precipitated, is associated with combined water, forming a bulky and tenacious gelatinous mass. Its other prominent features in the present connection are its black color, its avidity for oxygen, its resistance to bacterial disintegration, and its tendency to evolve sulphureted hydrogen on exposure. On microscopical examination, no forms of life other than bacteria are observable. A marked difference between this deposit and ordinary sludge is seen in their respective resistance to bacterial attack. If a tank such as that described be sludged up at the usual rate of flow, and then allowed to rest, the deposit of sewage solids in the first compartments will practically disappear in about six months, while that in the last will be but little reduced, except as the effect of mere subsidence.

Secondary Deposits. One more serious practical difficulty in sewage treatment directly traceable to the same cause — namely, over-putrefaction — is the formation of a thick blanket growth on the surface of the filter. This growth, which for want of a better explanation has often been stated to be connected with the mode of application of the liquid to the filter, is really due to the presence of sulphureted hydrogen in the tank effluent. It consists of various species of sulphur bacteria which can only flourish in a situation where both sulphureted hydrogen and air are present. The surface of a sewage filter fed with normal septic effluent, always charged with sulphides, is an ideal locality for these organisms, and they take advantage of it to an extent which may seriously interfere with the efficiency of the filter.

Precisely the serious phenomena described may often be observed where sewage is discharged into running water. Immediately adjacent to the outfall there is a deposit of sewage solids and a luxuriant growth of sewage fungus, but no marked discoloration or offensive odor. Further downstream, and often separated from the outfall by a perceptible interval, the black deposits and offensive odors, popularly attributed to the sewage itself, but really due to the products of its decomposition, are to be observed. It follows that under the usual conditions of work, the destruction of original sewage solids in the septic tank is largely counterbalanced by new formations. If it were not for the constant discharge of appreciable quantities of this secondary deposit at the outlet of the tank, this phenomenon would have attracted greater attention, while the general absence of baffle walls has further disguised the local deposit by allowing the sludge to assume a fairly uniform level on the floor.

The following arrangement was found to give the most useful results. Each tank is divided into four compartments by three dwarf walls placed

at equal distances apart. The first wall is brought up to an inch from the surface, and the first compartment therefore forms a sump, which can be dealt with in any desired way without disturbing the rest of the tank. The remaining walls rise to 1 foot from the surface. All the scum boards, except that connected with the outlet of the tank, dip 2 feet into the liquid, and therefore overlap the walls by 1 foot. They are placed vertically midway between the walls. The withdrawal of the tank effluent is by means of a plain sill, protected by an obliquely placed scum board. The whole arrangement has been given an extended trial, and the tanks so equipped have worked more uniformly and successfully than any other modification.

It was concluded from the first series of experiments that the best constant rate of flow — that is to say, the most rapid uniform rate at which full-strength sewage could be passed through the tank with most satisfactory results as regards both destruction of sewage solids and quality of tank effluent — is insured by providing a tank capacity equal to one third the day's supply of sewage, or 1 cubic foot for 20 gallons, and that the extreme limits between which satisfactory results can be obtained are 12 and 35 gallons per cubic foot respectively.

Each month the first compartment has been filled to an average depth of 3 ft. 6 in., and therefore contained 125 cubic feet. The composition of the sludge on the average is as follows: Water, 91.72 per cent; volatile and organic, 4.48 per cent; mineral, 3.80 per cent. The month's accumulation of dry solid matter from 300,000 gallons of sewage amounts therefore to about 6 cwt.

There is a good deal of difference of opinion expressed as to the amount of sewage solids actually destroyed in the septic tank, but it probably seldom, if ever, exceeds 50 per cent of those introduced with the sewage, and is generally put at from 30 to 40 per cent.

In the present instance, making a liberal allowance for solids carried over with the tank effluent, the proportion which disappears must exceed 50 per cent. The modifications in the construction and use of the tank now suggested succeed, therefore, in abolishing the most serious drawbacks of the septic tank without relinquishing any of its advantages in respect of the easy and economical destruction of solids. But in order to secure these advantages, it is plainly necessary to acquire a fairly accurate knowledge of the average amount of sewage to be dealt with, and nothing is more astonishing in connection with schemes of sewage disposal than the general absence of information as to the volume of sewage dealt with, even in existing works.

It would not be safe to apply the conclusions of Mr. Stoddart, derived from these experiments with a very concentrated sewage, to all other plants, at random; but though unquestionably there are such variations in the quality of sewage as would make a very great difference in the chemical character of the sludge formed by long retention in the tank, it is possible in every case to retain sewage in a tank so long as to render its subsequent treatment by any bacterial process more difficult than necessary.

A grit chamber to remove heavy solid matter is always a necessity where combined sewers and drains communicate with sewage purification works, and sometimes advisable in connection with separate sewer systems; but when street drains are not connected with the sewers it should be made as small as practicable, and in cases of small plants it should be omitted altogether, as not a sufficient quantity of grit reaches the septic tank to require attention, and the grit chamber is apt to become foul from floating material. This must be provided against in the design.

The presence of grease in sewage is the cause of much trouble in sewage purification works, and care should be taken to retain grease in septic tanks as long as possible. In the removal of grease anaërobic filtration possesses advantages.

However, the septic tank is not the only means by which anaërobic action has been applied. There were early attempts, some of which have been described, at straining the sewage through beds of broken stone to facilitate its dissolution. For the most part these methods preceded knowledge of the fact that aërobic filtration is different in its results from anaërobic filtration; but anaërobic filtration is still of much interest, as it is a great assistance in facilitating the decomposition of grease, which may pass through a septic tank not fully decomposed. The grease has a tendency to adhere to the surface of the stone, where it is subjected to the action of the ammonia in the

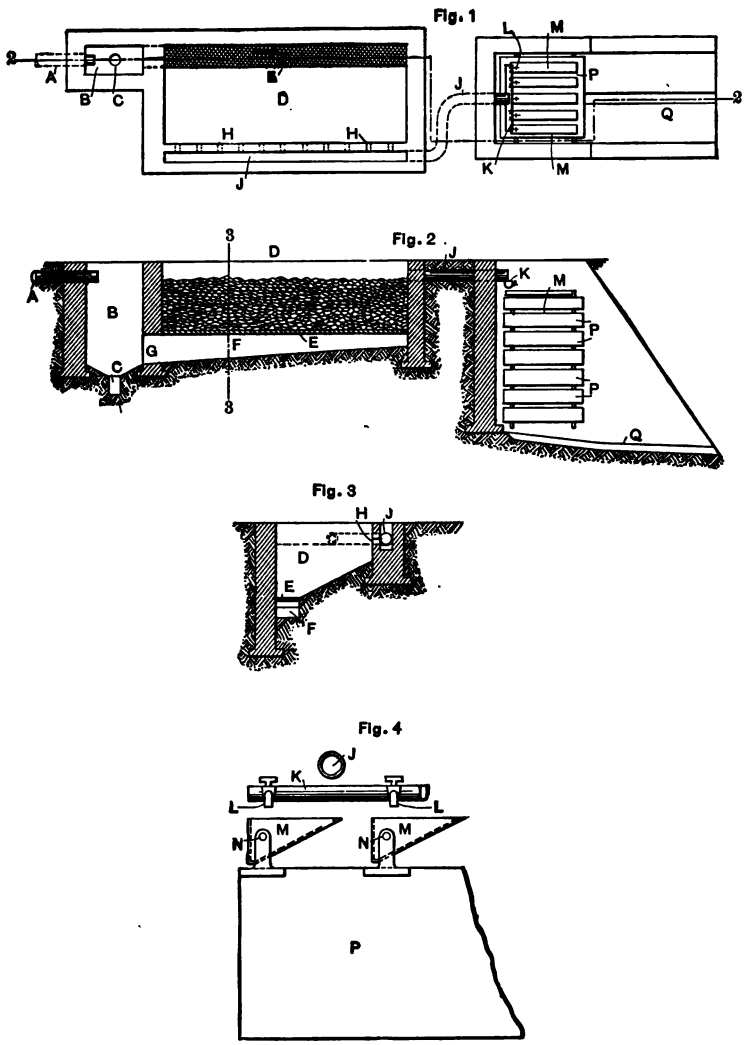

Fig. 12. Anaërobic filters of Scott-Moncrieff, 1899.

sewage as the latter flows through the stone, and is slowly dissolved.

Patent No. 624,985, issued May 16, 1899, to William Dundas Scott-Moncrieff, of London, England, is for an upward anaërobic filter in combination with an aërating device. This inventor's name is identified with the art of sewage purification. He was among the first to recognize the nature of bacterial action and to apply intelligently anaërobic treatment followed by aërobic treatment. His claims were as follows:

"1. The mode of treating sewage bacteriologically, which consists in causing the sewage to pass through an anaërobic apparatus, whereby the organic matters in the sewage become more or less broken up, and then causing it to pass downward through a series of separate superimposed filters having clear air spaces between them, whereby as the sewage passes through the filters and drips from filter to filter, highly aërobic conditions are established which are greatly favorable to the work of the aërobic organisms following after the work of the anaërobic organisms, and the sewage is consequently purified, substantially as set forth."

"2. In apparatus for the purification of sewage, the combination of a tank breaking up the organic matter of the sewage by the action of aërobic and anaërobic organisms as it passes through said tank, means for supplying sewage to said tank, a series of filters placed one above another with clear air spaces between them, and means for conveying the broken-up sewage from said tank and delivering it to the uppermost of said filters, substantially as and for the purpose set forth."

Where anaërobic filtration is used, some provision must be made for removing the sludge from beneath the filter, and in many cases from the filter itself. That a greater proportion of the solid matter in suspension can be removed by anaërobic filtration than is ordinarily removed in septic tanks, is established.

The following analyses of effluents from experimental filters at Lawrence, Mass., are of interest in this connection:

ANALYSES OF TESTS AT LAWRENCE, MASS., IN 1901.

TEMPERATURE OF SEWAGE 57 DEGREES.

	After passing through filter.	
	Anaërobic Filter No. 133.	Aërobic Filter No. 134.
Temperature . . . . . degrees.	52	59
Free ammonia	4 .98	2 .84
Albuminoid ammonia	.228	.142
Chlorine	11 .2	11 .13
Nitrates	.02	1 .61
Nitrites	0	.014
Oxygen consumed	1 .98	1 .10
Bacteria per c. c.	270,300	60,600
Rate per acre	1,582,900	1,131,200

Filter No. 133 has lost 65 per cent of voids in two years.

The sewage was practically the same as that given septic treatment in the experimental tank in 1898, analysis of which is given on page 70. The first treatment was in an upward anaërobic filter, the second in an aërobic filter. Comparison of the anaërobic filter effluent with the septic tank effluent is of interest. The showing of the aërobic filter is poor, and does not interest us particularly in this connection.

The extent to which the anaërobic process should be carried in any installation is a matter which must depend to some extent upon the subsequent treatment to be used, whether the anaërobic process be conducted in a tank or in a filter. The time required depends upon the process, the character of the sewage to be treated, and the temperature of the liquid. Thus the dimensions of a septic tank for any installation should not be determined before the processes that are to follow anaërobic action have been decided upon, and the tank itself should be subject to regulation.

CHAPTER VI

INTERMITTENT CONTACT SYSTEMS

INTERMITTENT contact systems operate by alternately filling with sewage and then emptying receptacles containing broken stone, gravel, cinders or other material with a large proportion of void spaces. Such receptacles are called "contact beds." The liquid stands in a bed for a given period in contact with the bacterial growth which attaches to the surface of the granular material. After standing in contact for a certain time the liquid is discharged, and air is admitted to the bed to be absorbed by the bacteria before additional sewage is admitted. Contact beds are usually operated in conjunction with a septic tank, so that the liquid emptying into them is freed from the large solid particles.

There are many arrangements of contact beds. The sewage may pass in succession from one bed to a second, and from the second to a third, and so on, through as many successive repetitions of the process as may be desired. The period that it remains in any bed may be long or short. One series of beds alone may be used, or several beds may be used to receive the sewage from the septic tank in succession. Which arrangement of contact beds will be most economical for any particular occasion will depend chiefly upon local conditions. If it is practicable to secure repeated treatment without having to resort to pumping, it will be found to be most economical in the majority of cases to repeat the contact two or more times, while, if the available fall is small, it may be found advisable to employ single contact rather than to resort to pumping, although the works required to secure adequate purification by single contact are considerably

larger than those required where the contact is several times repeated. There has been some doubt expressed as to the economy of using several contacts in succession. The view here expressed has likewise been expressed by Dr. Gilbert J. Fowler, the eminent chemist of the Manchester Corporation Sewage Works, in a communication to the International Engineering Congress, 1905, discussing the paper of Mr. George W. Fuller, entitled "Sewage Disposal in America" (Transactions American Society of Civil Engineers, Vol. LIV, Part E, page 212). That such ought to be the case has been shown by the writer elsewhere in this chapter.

Before discussing the relative merits of different contact systems in order to discover which arrangement is most suitable to meet given conditions, a review of American patents for devices of this kind will be of value.

No patent exists covering the principles of contact beds in general. Any person may build beds by which the sewage is admitted at the top and liquids drained away at the bottom after standing in the beds for some time. There are, however, many patents covering arrangements intended to facilitate the filling and the discharging of the beds to make them automatic, and there are a number of patents relating to the construction of beds for the purpose of making aëration sure and clogging unlikely.

Patent No. 556,594, issued March 17, 1896, to F. L. Union, of Braintree, Mass., shows in its drawings a double contact system with one bed located above the other with means for discharging the liquid from one bed to the other intermittently.

Patent No. 559,522, issued May 5, 1895, to Amasa S. Glover, is illustrated in Figure 6. Mr. Glover claims: "A sewage apparatus comprising a series of stationary primary filter beds, a structure over said beds with provision for the removal of offensive gases therefrom, and a series of stationary secondary filter beds located outside the said structure and arranged to

receive by gravitation the effluent from the primary filter beds, the said primary beds being constructed to discharge the effluent wholly through filtering material, whereby the offensive

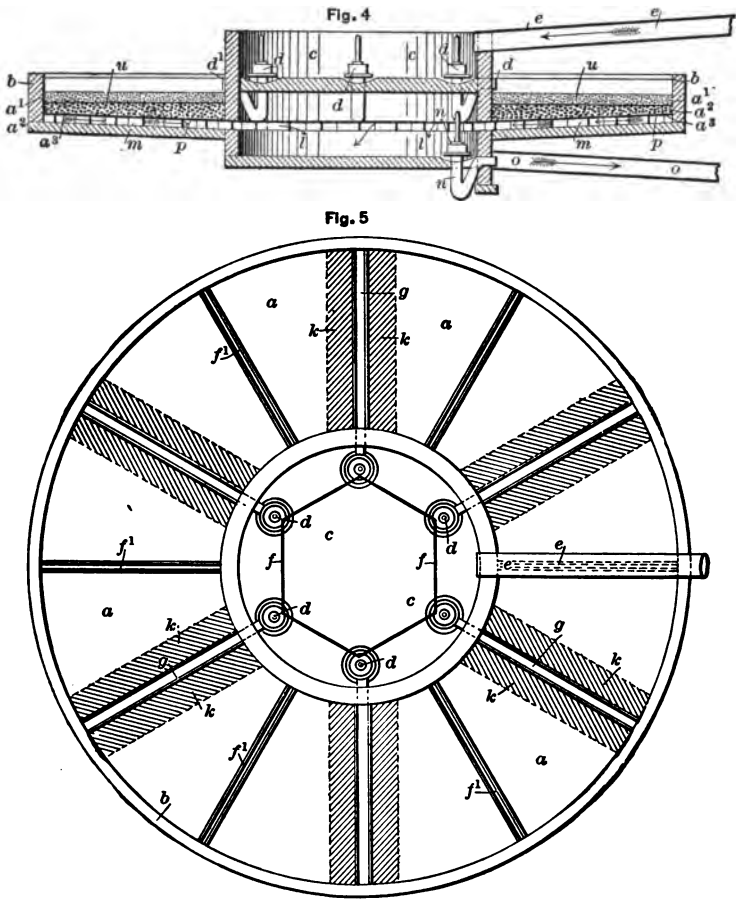

Fig. 13. Contact beds as arranged by W. J. and C. J. Lomax, 1896.

matter is retained in the structure and the effluent is clarified and partly purified, and whereby the said effluent may receive subsequent treatment in the open air by extensive secondary beds for any required length of time without offense."

There has been considerable discussion as to whether Mr. Glover understood the difference between anaërobic and aërobic action when he took out this patent.*

Patent No. 560,512, issued May 19, 1896, to W. J. Lomax and Charles J. Lomax, of Bolton, England, is illustrated in Fig. 13.

This is for a construction of beds in connection with a series of siphons to deliver sewage to various beds in turn, and a siphon to discharge the liquid from the beds intermittently.

Patent No. 601,052, issued March 22, 1898, to John J. Deery, of Philadelphia, Pa., is rather elaborate in its drawings and description. The device consists of one filter mounted above another so that the water may drip from the upper to the lower, and absorb air while doing so.

Patent No. 603,221, issued April 26, 1898, to James S. Miller, of Reading, Pa., appears to be somewhat complicated. There are fourteen claims, most of them quite long, and not of sufficient interest to demand repetition.

Patent No. 624,985, issued May 16, 1899, to N. D. Scott-Moncrieff, has been illustrated in Fig. 12. In this system the aëration is accomplished by allowing the sewage to pass through a series of trays placed one above the other wherein a large surface is exposed to the action of the air.

Patent No. 628,987, issued July 18, 1899, to J. A. Maignen, is illustrated in Fig. 14. This was intended to apply to the filtration of water under pressure, but is of interest as showing a means for withdrawing air from out filter beds.

Patent No. 664,532, issued December 25, 1900, to William L. Church, of New York, is illustrated in Fig. 15. The object of this device of Mr. Church is to cause the sewage to pass through the filtering material in a series of waves so that it will be filtered through a great distance of filtering material without having an excessive fall.

* See Mr. Snow's contribution to the discussion of Mr. Leonard Metcalf, Mem. Am. Soc. C. E., Transactions Am. Soc. C. E., Vol. XLVI, page 474.

Patent No. 732,208, issued June 30, 1903, to G. D. Mitchell, is illustrated in Fig. 16. The feature of Mr. Mitchell's patent that is of interest is represented by the channels made especially for drawing air from the bed into the stack e^5.

Patent No. 762,466, issued June 14, 1904, to William L. Church and G. E. Hill, is of interest because of the system of

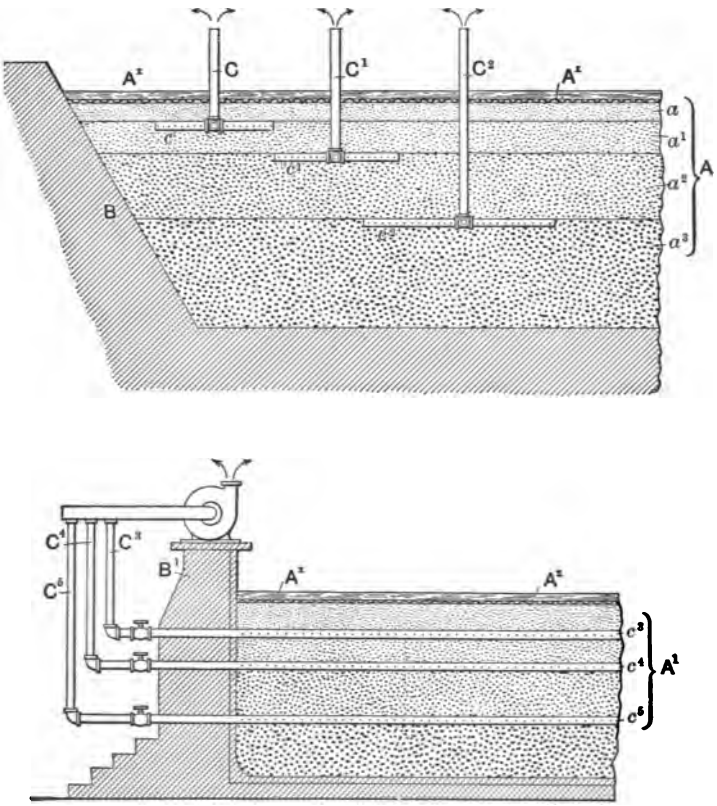

Fig. 14. Method of aërating filter, J. A. Maignen, 1899.

both filling and discharging the tank from the bottom, and of causing the tank to be alternately filled and emptied with the same sewage by means of a pump if desired.

These examples, which cover most of the patents of interest

relating to contact beds proper and to the arrangement of contact beds, will be sufficient to afford some idea of the general character of these structures. Before proceeding with a pre-

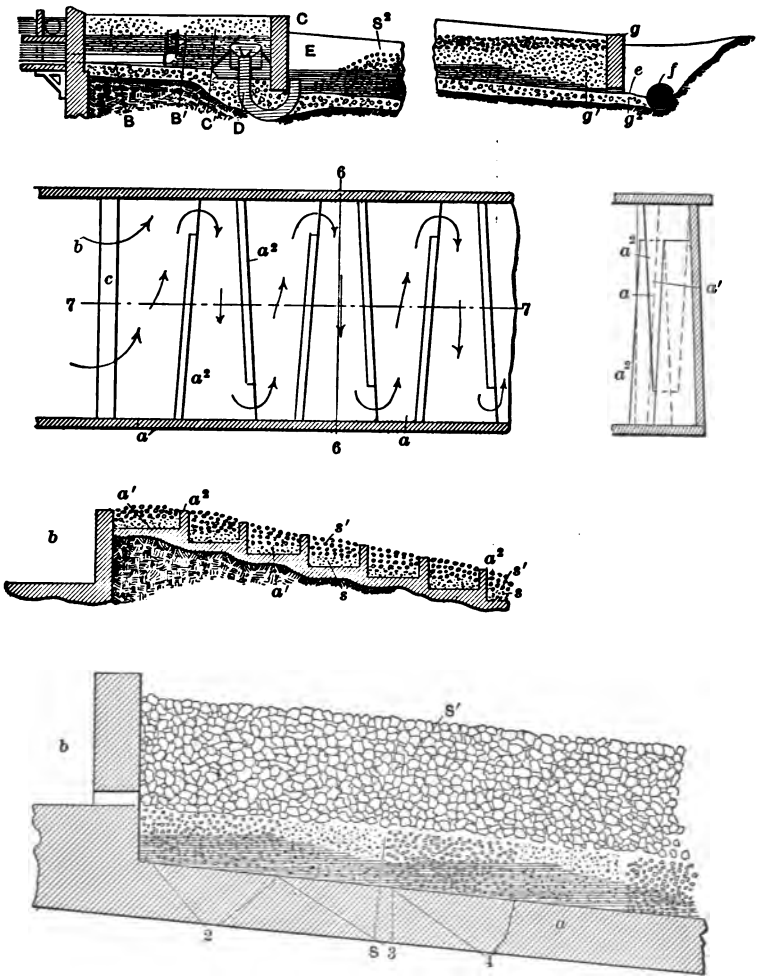

Fig. 15. Elongated contact bed of W. L. Church, 1900.

sentation of the principles of the various automatic devices by which these beds may be filled and emptied, it is well to turn our attention to the advantages and disadvantages of different

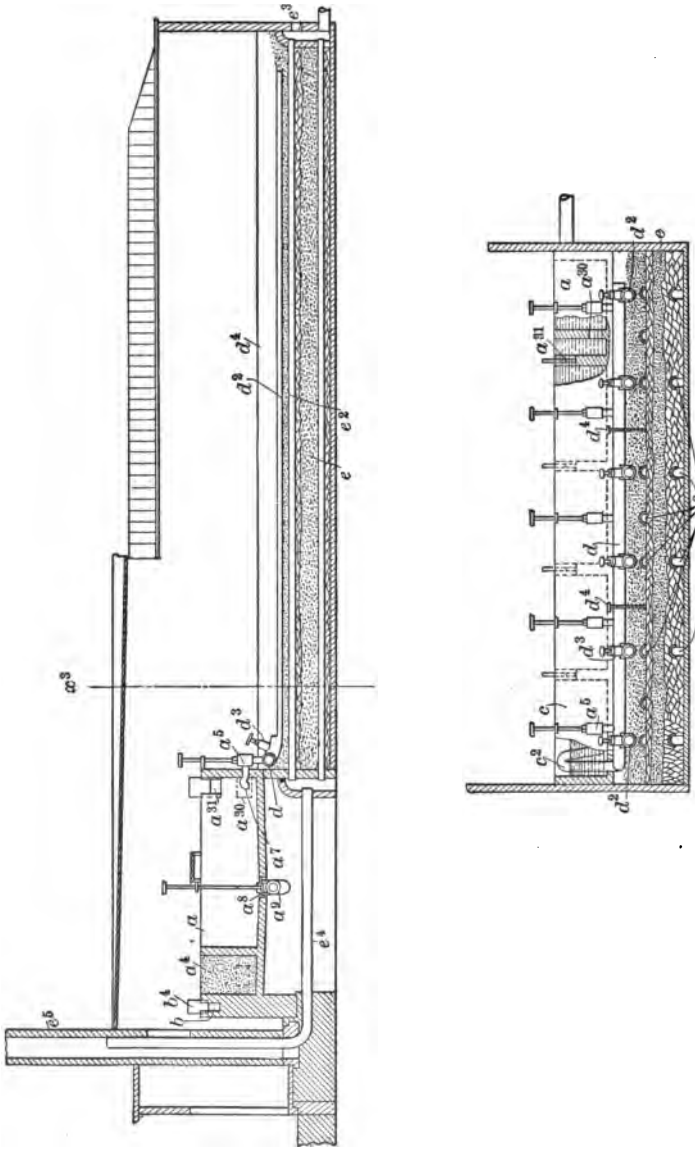

Fig. 16. Method of aërating filter, G. D. Mitchell, 1903.

arrangements of beds; and in order to do this, it is necessary to investigate the distribution of the activities in simple contact beds by which purification is secured.

Let us first consider the operation of a single contact bed several feet deep with water-tight walls and bottom, containing drain pipes laid close together in the bottom connected with a main supply pipe through which sewage may be admitted to the bed or withdrawn from the bed as desired, and filled with suitable gravel. Assume also that the surface of the gravel stones has become covered with bacterial growth capable of absorbing the organic matter from sewage. If sewage be admitted to this bed through the supply pipe, it will rise by degrees, forcing the air out through the surface of the bed until the bed is full. The bacteria will then act upon the sewage until the capacity of the bacteria for purification has become exhausted. Obviously the sewage being admitted at the bottom, the bacteria in the bottom layers will be the first to give up their oxygen, and if the sewage be admitted slowly, their supply of oxygen will become wholly exhausted before the tank is full, consequently the last of the sewage admitted will undergo very little purification, while that first admitted, which has passed entirely through the material in the bed, may have become greatly purified. It is obvious that when the contents of this bed are discharging, that coming from the bottom will be very impure, while that coming from the top will be comparatively pure; and two samples taken when the bed is full, one from the bottom of the bed and the other from the top, will show upon analysis widely different results. If the whole of the sewage in the bed be discharged into a tank or other receptacle where it can mix thoroughly, the analysis of a sample of the mixture will show results between those obtained from the analysis of the top and that of the bottom portions of the liquid in the bed.

As the liquid is allowed to discharge from the bed, the air is

drawn in from the top and follows the liquid down. Obviously the bacteria on the surface of the bed absorb oxygen from the air as it passes downward as rapidly as bacteria can absorb it, and the air reaching the lower layers of the bed will have its oxygen supply very much reduced if the discharge of the bed is very slow. Consequently, when the bed is next filled from the bottom, the bottom portions will be capable of effecting less purification than the upper portions, and in consequence the purification of liquid in the bottom of the bed will be very much less than that in the top. Now it is a fact demonstrated by experience of several experimenters, that the action of the bacteria in absorbing oxygen from the air when the air is fresh and the bacteria have been exposed to sewage, is extremely rapid; only a few minutes being required under these conditions to absorb about one half the available oxygen in the air and to produce a corresponding quantity of carbonic acid gas, rendering the air passed through the beds much less capable of parting with the remaining oxygen; and it is also an established fact that when bacteria have just received a liberal air supply, their action upon sewage that is in condition to be absorbed by them is almost equally rapid. Any person who is doubtful of these facts need but to observe the purification secured in deep filters, where the sewage remains in the bed in a process of trickling through only a comparatively few minutes. Further reference to the behavior of sewage in such filters will be found in a subsequent chapter.

It is apparent that in order to secure uniform results in purification in a contact bed such as heretofore described, the filling of the bed and the emptying of the bed should take place as rapidly as possible, while to secure maximum economy the period of standing full and the period of standing empty should be such as to cause the greatest amount of oxygen to be absorbed from the air and to enter into combination with the sewage.

The most efficient use of material, however, might not result

in the greatest amount of purification of sewage where single contact is used. In fact, it cannot so result if a high degree of purification is demanded. It is usually necessary to produce an effluent that will come up to a definite standard of chemical purity, and, as has been shown in a preceding chapter, if the sewage is strong, the volume of air displaced by it will scarcely contain enough available oxygen for purification, as all of the oxygen cannot be used. The periods of standing full and the periods of standing empty should be longer to secure maximum purification than to secure the greatest efficiency of aëration per unit of material per hour.

The importance of rapid filling and rapid discharging to secure uniform and efficient results has not been dwelt upon by engineers as much as it deserves to be. The importance of a long period of contact to secure thorough purification has been dwelt upon especially in Great Britain, where it has been insisted upon by legislation, and where not more than two fillings per day of single contact beds have been allowed. Now, however, it is recognized by practical engineers charged with the operating of sewage purification works that it is best to work the beds more rapidly and not to expect from the first contact a very high degree of purification, but to rely upon subsequent treatment to bring the effluent to a satisfactory degree of purification. If the purification in the first contact bed results in a reduction of the amount of oxygen absorbed by the effluent of the septic tank of 60 per cent or thereabout, the resulting liquid can be brought to almost any degree of purification likely to be called for by another contact and the cost of constructing and operating the two contact beds will be less than the cost of constructing and operating a single contact bed that will produce the same results. If a very high degree of purification is demanded, it will be found more economical to employ three contacts than to employ two.

The case of a contact bed filled from the bottom and emptied

from the bottom has been taken for the sake of illustrating the principles of aëration. From the experience of the writer with beds of other kinds five feet deep, with which he was able to conduct experiments for the sake of information, and to cause the sewage to enter at the bottom or at the top at will, it may be stated that practically no oxygen will be communicated to the last particle of sewage entering at the bottom of a bed five feet deep in this manner, even when the filling and discharging are as rapid as possible to make them in beds of sufficient size to be of practical use; also that an analysis of a sample taken from a mixture of all the liquids issuing from such a single contact bed during one discharge indicates the oxidation of about 60 per cent of the albuminoid-ammonia present in the effluent from the septic tank. If this effluent is dilute, the liquid leaving such a contact bed may be non-putrescible; but if the effluent from the septic tank be ordinarily strong, the effluent from a single contact of this character will not be found inoffensive upon standing. This type of bed, however, has certain points of advantage over beds filled from the top, in that the use of the same pipes for filling and discharging has a tendency to keep the pipes clear, and the interstices of the filtering material open; and where several contacts are to be used, it will probably be found applicable in some installations.

Usually contact beds are filled from the top by either running the liquid freely over their surfaces, or by allowing it to flow from half-round channels placed over the beds, or by flushing it into the surfaces of the beds through drain tiles placed a few inches below the top of the beds so as to protect them from the frost. By each of these methods a somewhat greater aëration is secured than by the method of filling the tank from the bottom, but by none of them can the bottom portions of the bed be made equally as effective for purification purposes as the top layers, because the air does not reach the bottom layers in sufficient quantity.

It is, therefore, highly desirable that means should be employed in contact beds to cause fresh air to pass through the lower parts of the beds, especially when the beds are deep. The simplest method of assisting in aërating the bottom layers is to provide means to allow fresh air to be admitted to the bottom pipes, so that when the bottom is emptied, air may be drawn into the bottom pipes and rise through the filtering material to the surface of the bed. Wherever the period of rest is very long, considerable aëration may be secured in this way, and such aëration may be facilitated by the application of artificial draft, though care must be exercised to see that an artificial draft does not draw through the bed so much more air than is required for bacterial action as to render that action less effective than it would be with a moderate supply.

If an induced draft is to be applied, it may be applied by connecting either the supply pipes or the discharge pipes to the stack, or exhaust. The one method tends to draw air through the bed from the bottom upward, and the other method tends to draw air from the top downward. Artificial ventilating of this kind is more likely to be found applicable in percolating filters than in contact filters, and some reference to it will be found in a subsequent chapter. In this connection, however, it is to be remarked that the drawing of an excessive quantity of air through any contact bed during the winter time may cause freezing of the bed unless the air is first heated. It is, however, possible to provide for the regulation of air drawn through a bed by any source of draft producing a known head by inserting in the passage between the source of the draft and the bed a diaphragm of suitable size.

It has thus been shown that with the treatment of sewage in contact beds to obtain high degrees of purification, we encounter certain obstacles inherent in contact bed systems, which can be to some extent overcome by each of the following methods:

1. By filling the beds rapidly and discharging them rapidly.
2. By making the beds very shallow.
3. By using several contacts in succession.
4. By drawing air through the beds during their period of rest.

These methods will be found to be applicable and to affect the cost of construction and of operation differently in different installations. If the beds are shallow, more land is required than if they are deep. If several contacts are employed, or if the beds are deep, more hydraulic fall will be demanded. Single contact with deep beds requires the least area, and artificial draft necessitates the use of fuel or of mechanical power. Which design will be advisable in any particular case must depend entirely upon local conditions. The cost of maintenance also will be found to vary with the different systems.

Where several contact beds are used in succession, it often becomes a difficult matter to determine beforehand the relative capacity of the beds for holding sewage. The engineer must therefore give careful attention to the following matters in order that two or more beds designed to receive sewage in succession shall have the proper relative capacity: First, to allow for the amount of leakage through the bottom and the sides of the beds if these are not water-tight. Leakage is always an important matter where the beds are constructed in soil of any character not lined with concrete or any impervious material. Second, to prevent diminution in capacity by clogging of different beds in the series owing to the deposit of the sludge from the septic tank, or to the growth of bacteria in the beds. Third, to allow for unequal proportions of void spaces in the filtering material contained in the beds owing to the employment of different materials, or of materials of different grades of fineness, in different beds. If the capacity of one bed does not correspond with that of its fellow, the amount that can be treated in the system will be determined by the bed of least capacity, and

difficulties will be experienced in the regulation of automatic discharging devices if the water levels in the various beds do not conform exactly to the levels for which those devices are designed.

Hitherto mention has been made of the advantages of arranging several contact beds in sequence. It is also advantageous in some cases to arrange beds so that they receive sewage alternately or in rotation; thus using two, three, four, or more beds; each of which receives sewage from the septic tank for a short time only. In some installations the filling of one bed is arranged to cause the emptying of another bed, while in some systems the filling in each case is controlled by one set of apparatus and emptying each bed by an independent discharging apparatus. The devices for governing the flow of sewage into contact beds are discussed in a subsequent chapter. Large sewage purification works may, of course, be operated by hand at the judgment of the attendant. It is not necessary to have an attendant constantly upon the ground at small installations, and at large installations it often will be found more economical to employ automatic devices under the general supervision and subject to the regulation of an interested man in charge.

The material to be used in contact beds is, next to the hydraulic design of a system of contact beds and accessories, the most important element of design to be determined by the engineer. In Great Britain, the material commonly used is cinders or coke, screened so as to remove all the fine particles of ash. In the United States cinders have not been found so satisfactory, especially in the Middle West. In one installation, which the writer examined, a tank five feet deep had been filled with cinders made from coal mined in Iowa. The material lasted less than a year, becoming so packed in that time as no longer to permit the passage of sewage. At the time of the writer's visit, it had been taken out and replaced by very coarse broken

stone, and the sewage was passing through the bed with almost no purification. Having contemplated the use of cinders in other installations, the writer constructed an experimental filter to test the advisability of cinders from a garbage crematory where Kansas coal was used, although the cinders were derived chiefly from the clinker of garbage and refuse. This material was better than that from Iowa coal, but when the filter was examined after several months of operation, it was found that the decomposition of the clinker was comparatively rapid, and that this bed, although the materials had been screened with great care, could not be relied upon for permanent service.

Crushed limestone is comparatively easy to obtain throughout the valley of the Mississippi and its tributaries. Some of this material is sufficiently hard to make good filter beds, but some of it is very soft, and packs rapidly in water. If crushed limestone must be used, great care should be taken to see that all particles of clay and soft stone have been removed by screening or washing, as the fine particles obtained by crushing limestone form a binder which tends to cause the stone to pack like the surface of a well macadamized road. Properly to prepare limestone for filter beds, the material should be crushed twice, the very fine material being screened out after the first crushing, and again after the second crushing. By these means a filtering material comparatively free from clay and soft particles may be obtained.

Glacial gravel, which occurs abundantly in many parts of the United States, is perhaps the best material available for contact beds where it is found. It is usually hard and comparatively clean, and in many localities may be obtained by hydraulic dredging. It may be screened in running water as it comes from the dredge, and carefully graded into suitable sizes either while wet or when dry. It is of great importance that gravel used in contact beds be free from sand, therefore the attention given to the screening should be careful. The

gravel itself can be used to best advantage by screening it into grades so as to obtain the largest possible percentage of void space. The void space in gravel is not as great as that in cinders, but by careful manipulation it is possible to secure 45 per cent or more of void space with gravel of almost any average size of particles. The writer has made a number of experiments for the purpose of determining the relative sizes of stones that may be obtained by screening so that the mixture will contain the largest possible amount of void space as required in contact beds, and also so that the void space may be as small as possible as required in the making of concrete, and it is determined that for practical purposes gravel for use in contact beds should be composed of pebbles varying in size from a given diameter to about one fourth or one fifth of that diameter, smaller stones and larger stones being excluded. Thus if it should be determined that the smallest stones to be used in a given contact bed should not pass through a slot of metal one eighth of an inch wide, the largest stones in that material should be able to pass through a slot one half of an inch wide. If the natural gravel contains a considerable quantity of hard stone more than one half inch in diameter and not too large for use, the gravel may be separated in two grades, otherwise it should be screened so as to obtain the largest amount of useful material of one grade, the grade selected to be determined by an analysis of the natural gravel. Stones larger than two inches in diameter are too large to be considered suitable for work of this kind. As for the smallest size that may be used, there are many different opinions. The smallest nominal size depends generally upon the care with which the material is prepared. It is scarcely practicable to screen gravel from a bank or pit so as to retain all particles that will not pass through a slot one eighth of an inch wide and not at the same time retain a considerable quantity of sand, unless the screening is done in running water. The writer finds that material as

small as one sixteenth of an inch in diameter is useful in contact beds where the amount of impurity in the sewage has already been considerably reduced.

The effectiveness of a contact bed depends upon the quantity of bacterial growth that it can maintain in a highly active condition to attack the organic matter in the sewage. This quantity in turn depends upon the surface exposed by the material of the bed for bacteria to cling to, and upon the effectiveness of the aëration when the bed is drained. Manifestly, therefore, the best size of granular material to use in a filter bed depends upon the period of contact, the time standing empty, the degree of concentration of the sewage, the system of aëration, the size of solid particles left by preliminary treatment, the depth of the bed, and the physical and chemical qualities of the material itself.

The degree of purification that can be secured with contact beds may be illustrated by a few examples. The first is data regarding an experimental filter at Barking, as given by Dr. Rideal. *

"The further experiments with a one acre coke breeze filter at Barking are well known. As at Massachusetts, it was found that continuous running resulted in clogging and a foul effluent, and that to obtain the best results the commencement must be made with small quantities of liquid; the filter, which was composed of three feet of coke breeze and three inches of gravel, being at first merely filled and emptied twice a day, with a view of producing an active bacterial bed. Daily determinations were made, from which the following averages are computed:

* Rideal, p. 184.

AVERAGE ANALYSIS FROM ONE ACRE FILTER (Dibdin).

Parts per 100,000.

Date.	Volume per acre per day.	Oxygen absorbed in 4 hours.		Albuminoid ammonia.		Nitrogen as nitrates.		Per cent purification by oxygen absorbed.
	Gallons.	Effluent.	Filtrate.	Effluent.	Filtrate.	Effluent.	Filtrate.	
April 7 to June 9, 1894	500,000	5 .85	1 .23	.593	.138	.182	.340	79 .3
Aug. 3 to Nov. 9, 1894	600,000	5 .18	1 .42	.565	.158	.032	.200	79 .6
Nov., 1894 to March, 1895	1,000,000	5 .87	1 .33	.545	.160	.565	.100	77 .5
April 8 to April 20, 1895	1,000,000	5 .00	1 .26	.514	.146	.204	.110	75 .4
May to Sept., 1895 .	1,000,000	6 .62	0 .91	. . .	. . .	. . .	. . .	80 .7

The highest efficiency reached was 83 per cent purification, with a million gallons daily and a shorter time of rest. The filter was finally worked on the system considered to be best at Barking, Exeter, and Sutton, namely, alternate filling, resting full, and emptying, with a periodical entire rest empty for complete aëration. At Barking, the filling occupied two hours, the standing full one hour, the emptying five hours, so that three cycles of eight hours were completed each day. From 10 p.m. on Saturday, till 6 a.m. on Monday, the filter rested empty, making a period of 32 hours each week.

The following data are from the reports of the Massachusetts State Board of Health, and were obtained from small experimental filters:

1898. Two contact beds arranged in sequence, the first being filled two feet deep with crushed cinders, and the second with two feet of coke. Quantity applied was 685,000 gallons per acre for first bed, and 565,000 gallons per acre for second bed. (This required a quantity of filtering material in each bed approximately equal in bulk to the daily flow of the sewage.)

Parts per 100,000.

	Filter 107.	Filter 108.
Free ammonia	1.61	.81
Albuminoid ammonia	.21	.12
Chlorine	5.7	5.4
Nitrates	.45	.93
Nitrites	.02	.02
Oxygen consumed	1.3	.86
Bacteria per c. c.	371,000	203,700

1899. The same beds, worked at the rate of 726,000 gallons per acre per day upon No. 107:

	Filter 107.	Filter 108.
Free ammonia	1.62	.521
Albuminoid ammonia	.23	.119
Chlorine	6.55	6.17
Nitrates	.66	1.54
Nitrites	.03	.0057
Oxygen consumed	1.83	1.01
Bacteria per c. c.	503,300	228,800

Two fillings per day in 1898, and three fillings per day in 1899, were required to apply these quantities.

A contact filter five feet deep, of screened cinders, filled once a day, worked at the rate of 560,000 gallons per acre per day. The voids fell from 55 per cent to 43 per cent in the first two months, and remained practically constant for two years following. It was found that oxidation of sewage ceased within two or three hours after the bed was filled.

Contact filter No. 103, filled five feet deep with coke, filled once a day, working at a rate of 620,000 gallons per day, gave the following results in parts per 100,000:

Temperature	56 degrees
Free ammonia	.43
Albuminoid ammonia	.07
Chlorine	8.85
Nitrates	2.67
Nitrites	.0086
Oxygen consumed	.63
Bacteria per c. c.	94,500

From these instances it is readily seen that with single contact systems it is quite practicable to turn out a fair effluent, using for the works only about one tenth as much land area as is required for ordinary intermittent sand filtration. Where beds must be prepared of material brought from a distance, the contact bed is unquestionably cheaper than the sand filter. Where repeated contacts of shorter duration are employed, the advantage may be much greater.

CHAPTER VII

AUTOMATIC DISCHARGING DEVICES

As most of the automatic appliances for controlling the operation of contact beds are patented, their construction can perhaps best be presented by citing interesting patents granted for such devices in recent years. In most cases cited no single sheet of drawings given in the patent is sufficient to illustrate the device, and consequently no illustration is reproduced herein. This review by no means covers all patents granted, but selects such as will illustrate the subject, or be of general interest to one desiring to study this matter further. Most of the devices referred to are well known to those interested in sewage purification engineering.

Patent No. 625,605, issued May 23, 1899, to G. E. Ridgway, applies to a device for a controlling valve for distributing liquid in turn to a number of beds. The devices shown cannot well be illustrated in a single drawing taken from one of the eight sheets attached to the patent. Claim 6 is typical. It is as follows:

"An apparatus for distributing liquids, having a tank, a number of siphons in said tank connecting the tank with different outlets, means for successively opening communication between the tank and the successive siphons upon the rise and fall of the liquid in the tank, substantially as described."

Patent No. 645,160, issued March 13, 1900, to F. A. Barbour, of Brockton, Mass., assignor of one half to Frank H. Snow, is for the same purpose as the patent just cited. Contrast the following claim with that just given:

"In an apparatus for applying sewage or other impure liquids

to purification beds, the combination of a distributing tank which receives the raw sewage, an automatic siphon leading from said tank, a plurality of distribution passages leading to several beds, a single gate which controls said passages, and apparatus actuated by the rise and fall of the liquid in the tank to operate said gate so as to open said passages one at a time and close all the others, substantially as described."

Patents Nos. 634,424, 634,425, 634,426, 634,427, and 634,428, to Cameron, Commin and Martin, all apply to devices for filling and discharging contact beds used in connection with the Cameron septic tanks. They consist of automatic valves operated in sequence by the rising and the falling of water in the tanks. The following claims are selected for their descriptive value:

"The combination of a plurality of receptacles, and automatic means actuated by the overflow from said receptacles for controlling the supply and discharge thereof."

"The combination of a plurality of receptacles, valves for controlling the supply and discharge of each receptacle, separate buckets for actuating said valves, the bucket which controls the supply receiving the overflow from another receptacle, and the bucket which controls the discharge being filled by the overflow from the receptacle which it discharges."

"The combination of a receptacle for containing liquid provided with a discharge orifice, a valve for closing said orifice adapted to be opened by the pressure of the liquid in said receptacle when said liquid rises to the desired height, and a means for holding said valve in open position until all the liquid therein has been discharged."

"The combination of a receptacle whose contents it is desired to discharge at two or more levels, of two or more valves for discharging such contents at the desired levels, which valves are successively opened by the action of the discharging apparatus, substantially as specified."

Patent No. 648,325, issued April 24, 1900, to S. H. Adams, of Harrogate, England, applies to an apparatus for automatic filling and discharging filter beds.

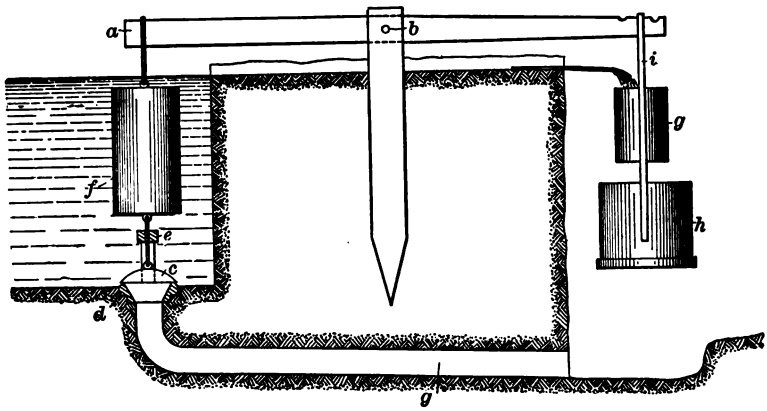

Fig. 1

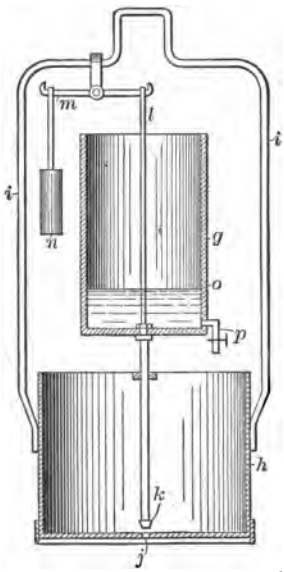

Fig. 2

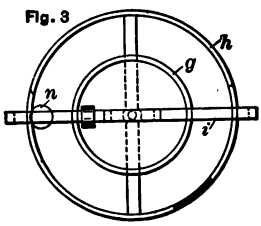

Fig. 3

Fig. 17. Automatic valve of G. L. A. Meyssonnier, 1901.

Patent No. 663,151, issued December 4, 1900, to F. A. Barbour, assignor of one half to Frank H. Snow, has the same

object as the previous patent of Mr. Snow, although the mechanism is different.

Patent No. 682,480, issued September 10, 1901, to J. L. A. Meyssonnier, is shown in Fig. 17, chiefly because it shows one of the several kinds of automatic valves by which tanks may be discharged where the liquid in them reaches a certain level. Difficulty is encountered in all apparatus of this kind in obtaining satisfactory closure of the valve as well as from clogging of moving parts.

Patents No. 686,913, issued November 19, 1901, and No. 703,090, issued June 24, 1902, to W. S. Shields, of Evanston, Ill., claim methods of operating valves in sequence.

Patent No. 733,746, issued July 14, 1903, to T. H. Ramsden, of Bramhope, near Leeds, England, applied to another arrangement of operating valves in sequence.

The Miller timing siphons are of considerable interest. There are a number of forms covered by various patents, among which are No. 702,066, No. 727,990 (Reissue No. 12,226), No. 727,991, and others of later date. Figure 18 illustrates one of the most improved types. The essential parts are: A main discharging siphon, of the type of the simple Miller flushing siphons; an air-sealing trap connected thereto, to determine the depth at which the siphon becomes sealed as the receptacle containing it is filled, and of sufficient length on the inside to insure that the siphon will not take air until the discharge is complete; an automatic blow-off valve to release the air entrapped in the siphon, started into operation by an auxiliary pipe connected to a bell in an adjacent pit; a siphon connection for discharging the pit containing the auxiliary bell; and a regulating cock for filling that pit slowly from the pit containing the principal siphon. It is essential to the proper operation of this device that all of the traps and pipes shall be of proper length (neither longer nor shorter will answer) and set at the proper elevations. It is also necessary that the water level to be dis-

charged shall be as contemplated when the siphon is designed. This condition is sometimes difficult to secure in all contact beds, but when it is secured these siphons are quite reliable.

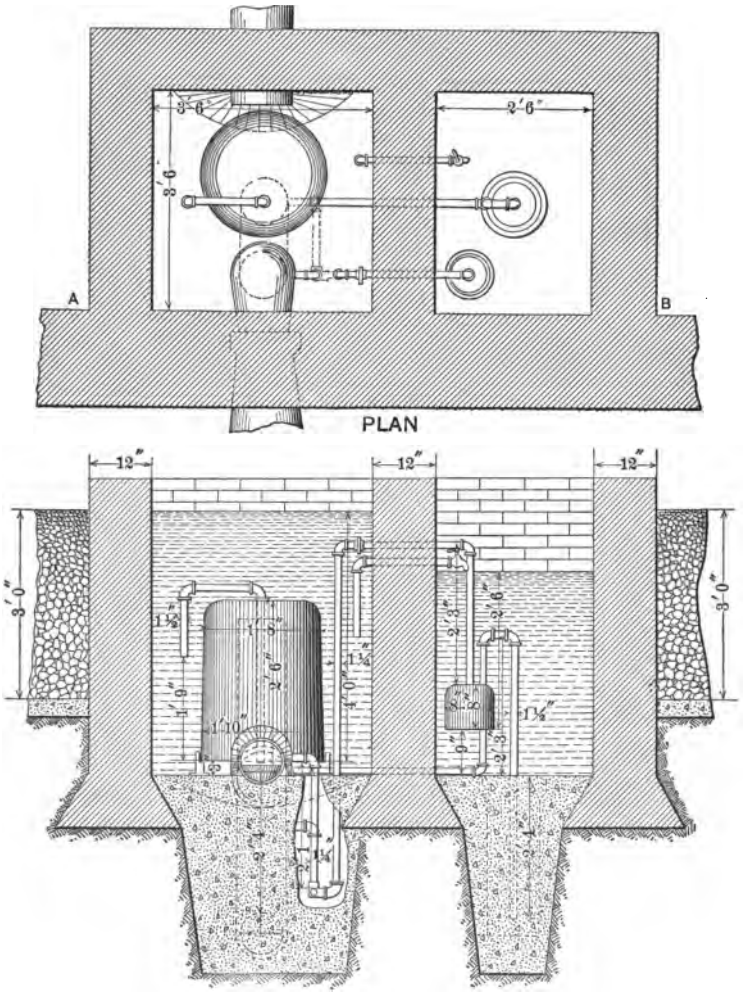

Fig. 18. Timing siphon of S. J. Miller.

Patent No. 709,233, issued September 16, 1902, to S. J. Miller, applies to a siphon arrangement for discharging liquid

from a dosing tank into several tanks in sequence. Some idea of it may be gathered from Fig. 19.

Patent No. 749,445, to the same inventor, is for the same

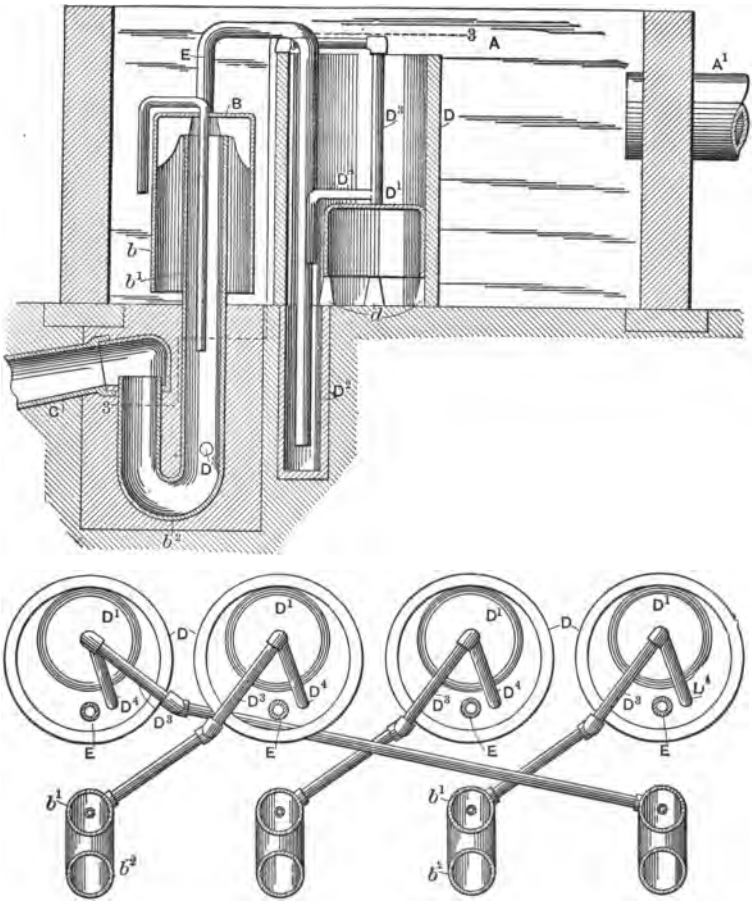

Fig. 19. Dosing siphons of S. J. Miller, 1902.

purpose. This is a very meritorious device. The first two claims are as follows:

"1. The combination with a liquid tank or receptacle, of a series of trapped siphons for emptying the same, and means operating at the time of the flow of one of the siphons for refill-

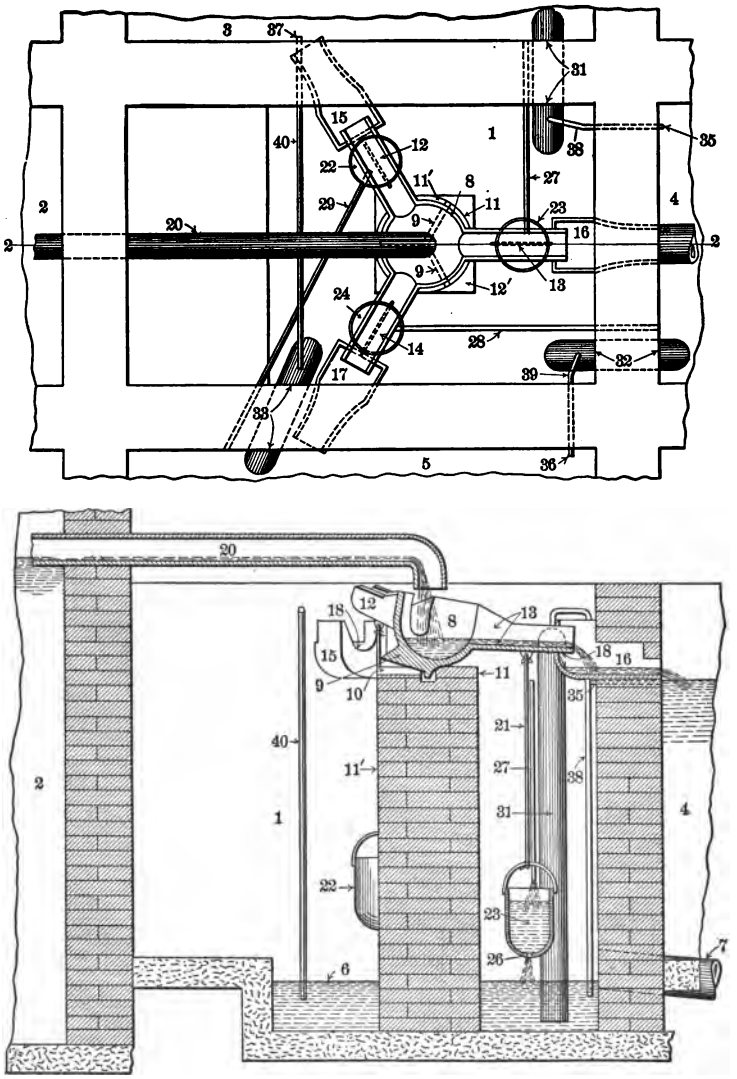

Fig. 20. Rocking valve of Williams and Whitman, 1904.

ing the trap or traps of certain of the idle siphon or siphons of the series by liquid which has not passed into the operating siphon."

"2. A combination with a liquid tank or receptacle, of a series of trapped siphons for emptying the same, and means operating at the time of the flow of one of the siphons for refilling from the liquid in said tank which has not passed into the operating siphon, the trap or traps of the siphon or siphons of the series with the exception of the trap of the siphon next to be brought into operation."

This device, as that illustrated in Patent No. 709,233, has the effect of requiring the use of whatever head is employed in the dosing tank, but in cases where this head is available, the apparatus will be found exceedingly satisfactory.

Patent No. 749,825, issued June 19, 1904, to A. Priestman, is another arrangement for distributing liquid in sequence to contact beds. Mr. Priestman's device does not require the use of a dosing tank, but it is not adapted for filling beds with great rapidity, being intended to operate at the same rate as the sewage flows into the septic tank. Where the number of contact beds to be used in sequence is sufficiently great and the fall available is small, this device is excellent. It resembles the Adams devices in principle.

Patent No. 754,730, issued March 15, 1904, to Williams and Whitman, of New York, is shown in Fig. 20. This device is interesting, as it contains no valves to set, and as it requires the sacrifice of very little head. It is applicable to beds that are intended to be filled at the rate at which sewage enters the septic tank, and is not adapted for sudden flushing or dosing.

Patent No. 760,770, issued May 24, 1902, to M. J. Adams, is of the same order as the Miller siphon for discharging beds in series. It is shown in Fig. 21. Its claims are important, as they are very broad, and two are here given:

"1. The combination with a liquid tank or receptacle, of at least three sealed siphons for emptying the same, and means acting during the flow of one siphon for strengthening the seal of another siphon of the series."

"2. The combination with a liquid tank or receptacle, of a series of trapped siphons for emptying the same, and means operating at the time of the flow of one of the siphons for refilling the trap or traps of the siphon or the siphons of the series

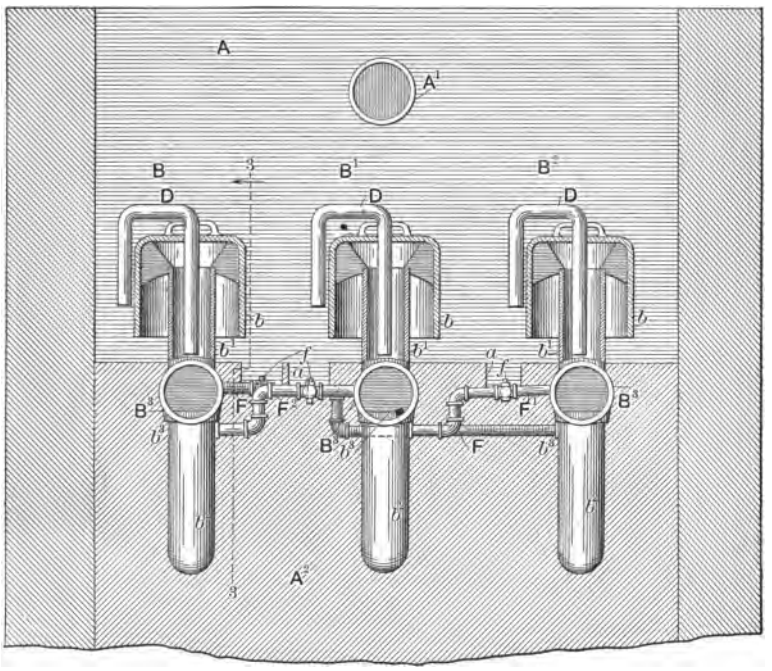

Fig. 21. Dosing siphon of M. J. Adams, 1904.

from the liquid in said tank, with the exception of the trap of the siphon next to be brought into operation."

Patent No. 764,699, to J. W. Alvord, is another device for operating valves in succession.

Patent No. 770,287, issued September 20, 1904, to Harvey and Bruce, applies to a tilting arrangement not wholly unlike that of Williams and Whitman, but operated by a different means.

Patent No. 790,520, to W. A. Moore, applies to an alternating device operated by a float and a heavy weight.

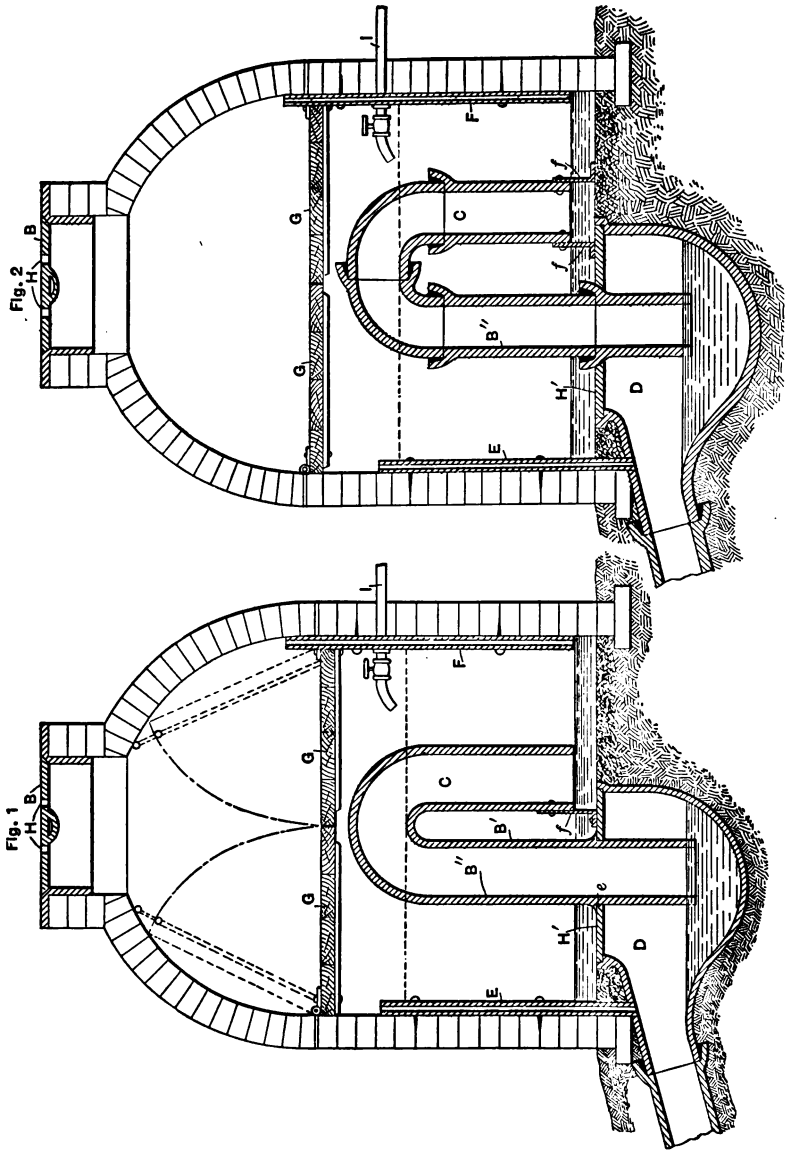

Fig. 22. Sewer flushing siphon of Vibbard and Chandler, 1882.

Patent No. 796,672, issued October 8, 1905, to A. Priestman, is an improvement on the device previously patented by this inventor.

Patent No. 807,267, issued December 12, 1905, to R. Harvey, is a device for similar purposes containing valves, siphons, and levers.

From the foregoing review it is apparent that three kinds of devices for controlling the flow from filter beds have been employed, namely:

1. Automatic valves operated by floats, levers, and other mechanical contrivances.

2. Tilting or rocking channels operated by the weight of the liquid or by floats.

3. Siphons set in operation by pneumatic or hydraulic pressures.

Siphons for these purposes are of such importance that a brief statement of the principles governing them will be made here, although this statement involves a description of some apparatus more useful for flushing sewers than for controlling filter beds. Fig. 22 shows the principles upon which a simple siphon must be constructed in order that it may operate intermittently. This illustration is taken from the drawing of Patent No. 262,860, issued August 15, 1882, to Vibbard and Chandler. It will be noted that the one end of the siphon at which the liquid discharges is submerged a very slight distance below the level of the liquid in the discharge basin, the other end of the siphon being in the receptacle to be discharged. As this receptacle is filled, air is forced up one siphon limb and down the other, bubbling up through the water in the discharge pool. The end of the discharge limb is submerged very little in order that when the water rises high enough to overflow within the siphon it may carry out with it the air remaining in that limb, thus causing the siphon to fill completely with water and to run full continuously until air enters at the receiving

end. Obviously such a siphon will not be reliable if the quantity of water flowing into it is too small to carry out the air with certainty whenever the proper level is reached.

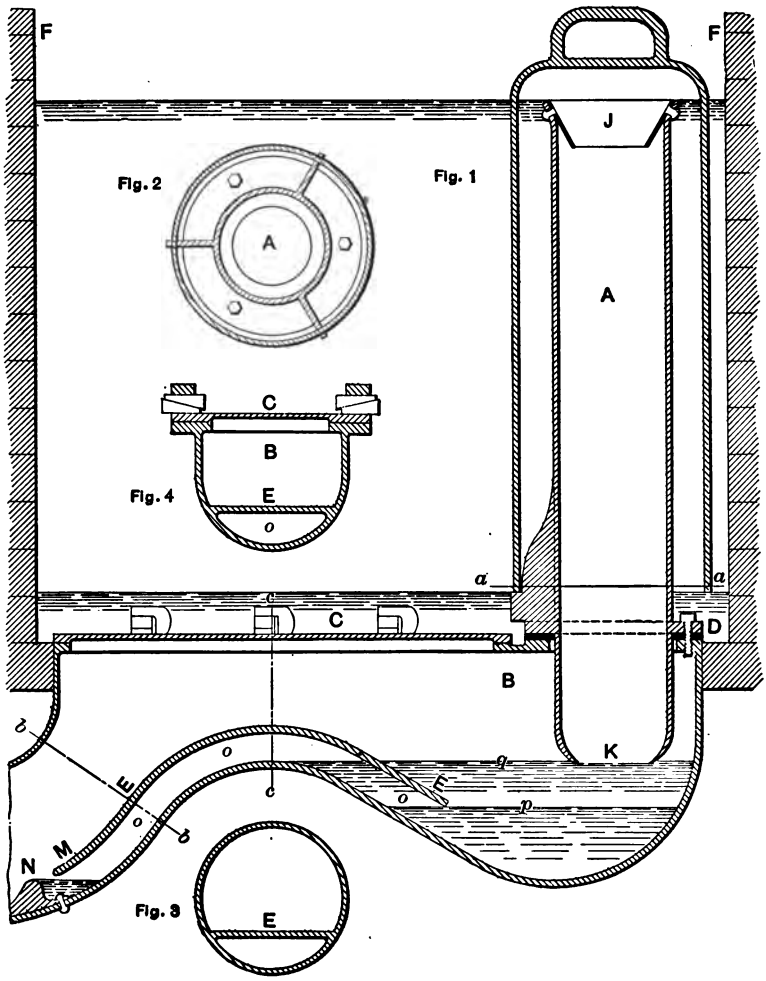

Fig. 23. Siphon by G. E. Waring, 1886.

Figure 23 is taken from Patent No. 336,182, issued February 16, 1886, to George E. Waring, Jr., and shows one method by which the difficulty of expelling the air from the siphon is partly

overcome. Mr. Waring employs a funnel-shaped apron to prevent the water from running down along the sides of the discharge limb and to cause it to fall to a point marked K on the diagram,

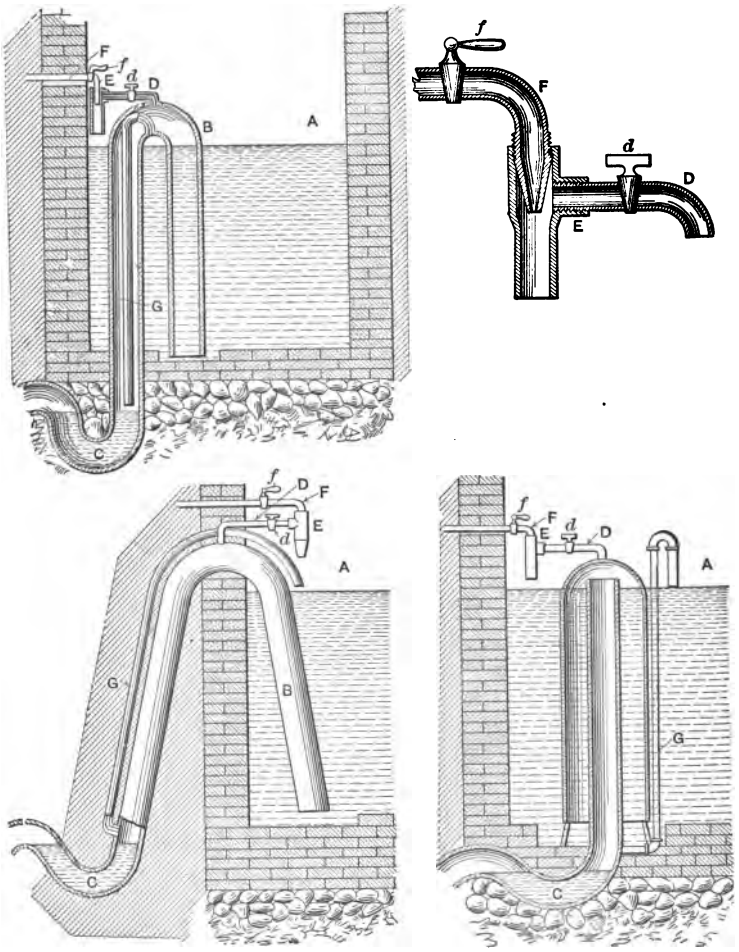

Fig. 24. Siphon by A. Rosewater, 1886.

thus carrying with it the air from limb A causing the siphon to discharge. Other auxiliaries intended to make the device more sensitive are shown in the drawing.

Figure 24 shows another device for the same purpose. It is taken from Patent No. 343,853, issued June 15, 1886, to A. Rosewater. In this device the water entering the receptacle to be discharged by the siphon is supposed to come from a source producing considerable pressure, and this pressure is utilized to

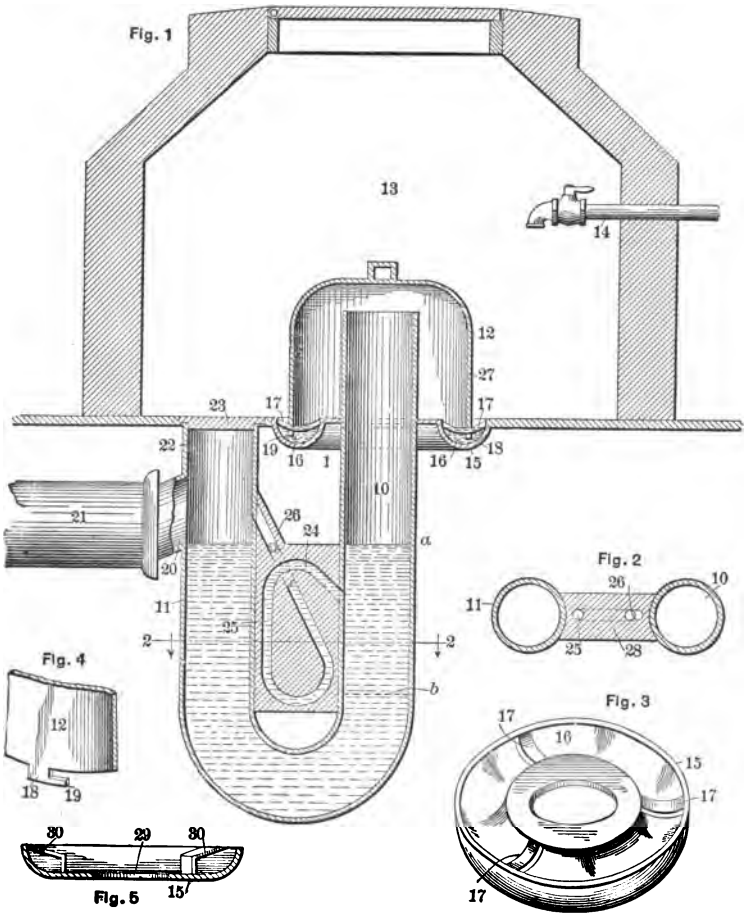

Fig. 25. Blow-off siphon by J. W. Berry, 1900.

withdraw the air from the siphon whenever the receptacle has been filled to a predetermined height.

Variations of designs operating upon these principles have been exceedingly numerous. The chief difficulty has been in securing the operation of the siphon when the rate of flow into the tank to be discharged is very small as compared with the rate at which the siphon is intended to discharge. This difficulty is avoided almost completely in siphons containing an automatic blow-off such as described in Patent No. 658,751, dated October 2, 1900, to James W. Berry, as shown in Fig. 25. This siphon operates as follows:

Starting with the tank empty and the trap full as shown in the

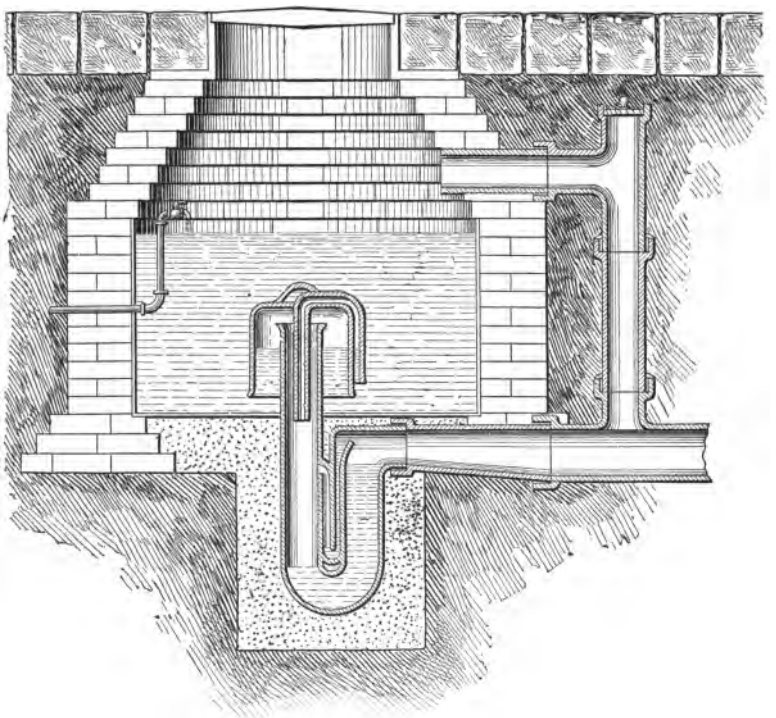

Fig. 26. Rhodes-Miller blow-off siphon.

illustration, the water enters the receptacle and fills it gradually.

As it does so it rises within the bell marked 12, and forces the

air in that bell downward in the pipe marked 10, causing the liquid therein to be pressed downward until it arrives at the level indicated by the letter *b*. At this point air enters the small trap with sufficient pressure to force the liquid in that trap to the discharging pipe; and as soon as the liquid is expelled

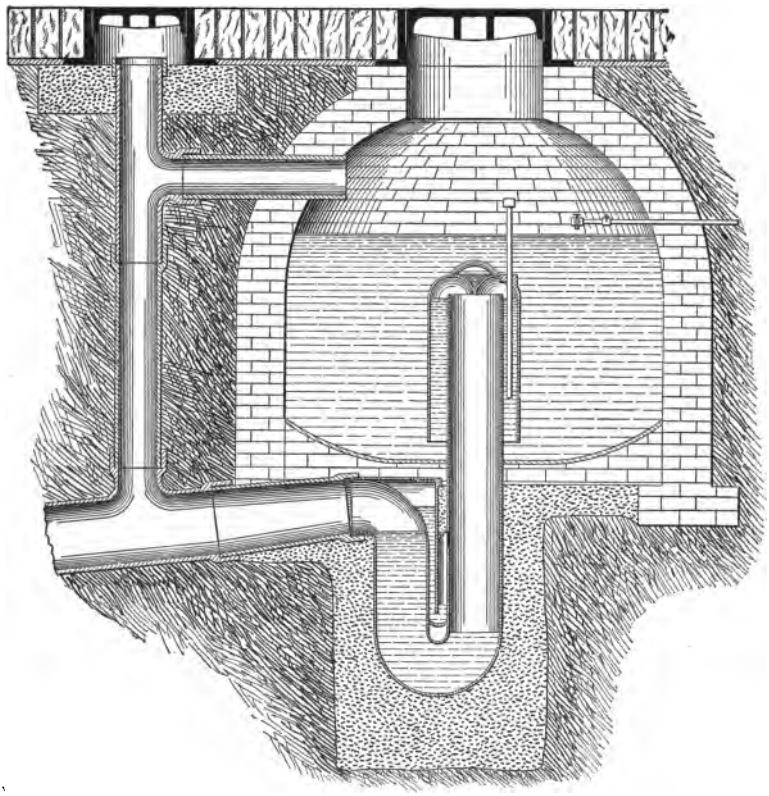

Fig. 27. Rhodes-Williams blow-off siphon.

the air in the pipe 10 escapes, allowing the entire siphon to fill with water and to discharge rapidly.

This same principle of automatic blow-off is employed in the Rhodes-Miller, shown in Fig. 26; Rhodes-Williams, shown in Fig. 27; the later designs of timing siphons of Mr. Miller, and in some of the Adams automatic dosing siphons.

In the automatic blow-out siphons the air is expelled through an auxiliary siphon, of less height than the main siphon, and of section so small that air bubbles cannot pass through it without causing it to blow out. Another method of withdrawing the air from the main siphon, devised by the writer, is illustrated in Fig. 28; taken from Patent No. 830,028, issued Sept. 4, 1906. In this device an ejector operated by water is employed, either to expel the air from the siphon, against a small pressure of water, or to suck the air into an auxiliary chamber by withdrawing the water therefrom.

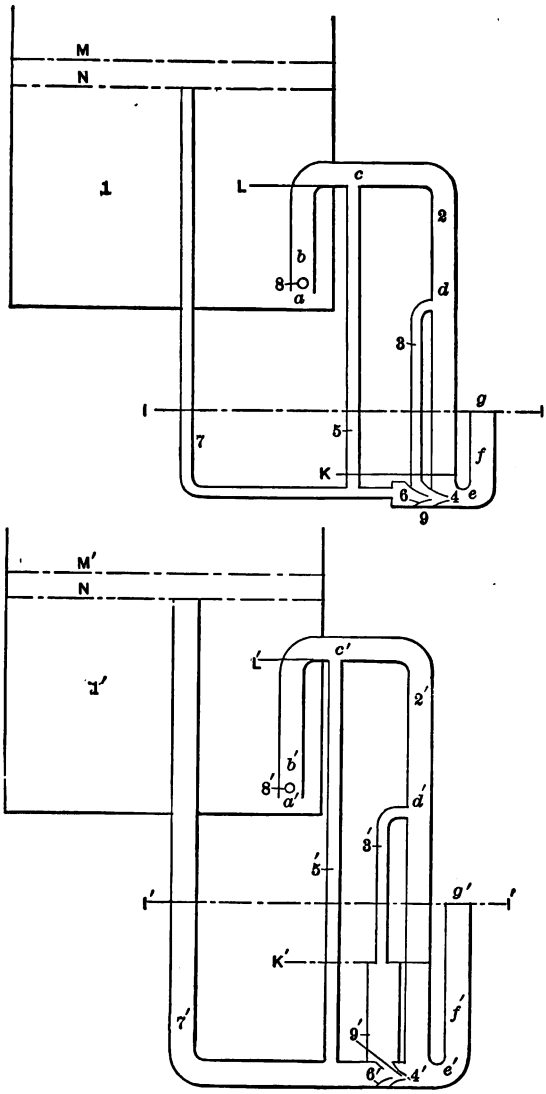

Fig. 28. Discharging siphon of W. M. Venable, 1906.

Rapid filling of a pit containing a siphon sometimes prevents

the latter from taking all of the air necessary for its proper operation. This trouble is especially likely to occur with siphons placed in pits slightly lower than the level of contact beds which they discharge. It may be overcome by placing a small hole in the siphon inlet pipe slightly above its mouth, so that the hole still continues to take air after the mouth of the pipe has been sealed by water.

To design a siphon to meet particular conditions is difficult. To make such a design the engineer should know accurately

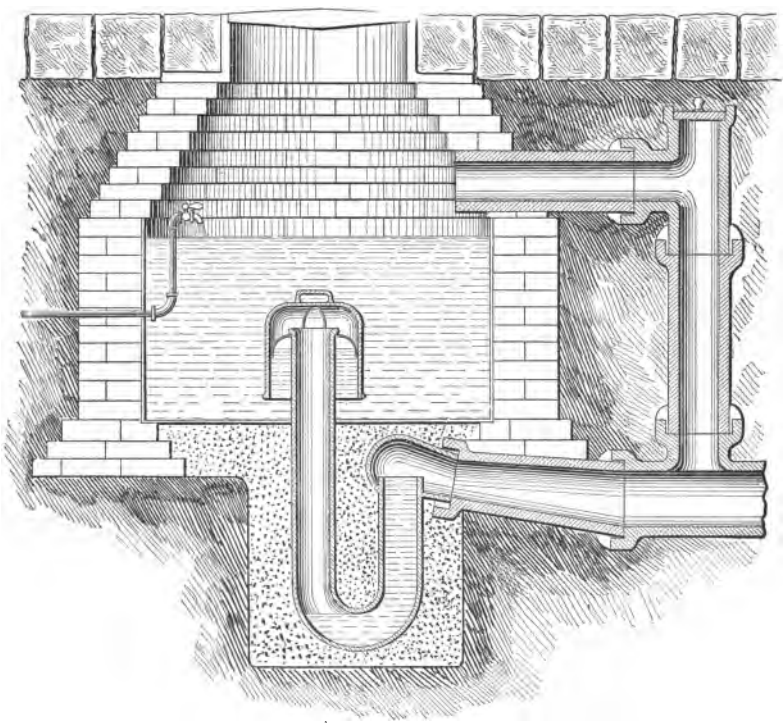

Fig. 29. Miller's "Automatic" siphon.

the head at which the siphon is to operate, the total head to be discharged, the quantity to be discharged, and the time to be taken to make the discharge. The writer has had a great deal

of labor thrust upon him in remedying defects in the operation of siphons in sewage purification works, which defects arose entirely from the siphons having been set at improper elevations and the water levels in the beds having failed to conform to the levels furnished the engineer who designed the siphons. There is probably nothing more annoying to one in charge of operating a sewage works than having automatic liquid-controlling devices arranged with too narrow a margin of safety for their reliable operation.

All auxiliary devices for insuring the discharging of siphons, such as sniff holes, blow-off pipes and jets, are likely to become clogged if the liquid contains solid matter in suspension, or slime or grease capable of being deposited within such devices. It is possible to design simple siphons that will be reasonably reliable; but all siphons used in sewage works require occasional inspection and attention, especially cleaning, to keep them in regular operation. Whenever, for any cause, a part of the air entrapped in the siphon is expelled, or leaks out, or the necessary quantity is not drawn into the siphon after any discharge, the siphon, instead of discharging full, permits a smaller stream to pass, and eventually acts merely as an outlet for the liquid at the same rate of flow as the inflow; in other words, it is of no service at all.

Of simple siphons, Mr. Miller's patented design is perhaps the most generally known, and is one of the most reliable. It is shown in Fig. 29. A simple S trap, open at both ends, will work equally as well if the limbs are *properly proportioned* as to length, and the discharge end is unconfined. Such siphons usually fail from not taking air enough after full discharge has ceased. Sniff holes prevent this, if kept open.

CHAPTER VIII

PERCOLATING FILTERS

By the term "percolating filters" the writer designates all of those aëration filters upon the top surface of which the liquid is distributed with uniformity and through which it seeps downward to the bottom where it is collected and conveyed away. The supply of liquid to such filters may be either continuous or intermittent. If it is continuous, it must be applied in the form of a spray or a shower. If it is intermittent, it may be applied in a spray or a shower, or of a dose sufficiently large to flood the top of the filter.

A percolating filter differs from a contact filter in two essentials: First, that the liquid is not allowed to accumulate in the filter, but is constantly in motion from the time it is distributed over the top until it is collected at the bottom and conveyed away; and second, that the filter is aërated while the liquid is passing through it.

In a contact bed it is manifestly impossible to maintain the process of oxidation of the sewage at a uniform rate, because, soon after each filling of the bed, the available oxygen is consumed. It has been shown in the preceding chapter how the efficiency of a contact bed system may be increased by shortening the period of contact and introducing a number of beds in sequence; but the system remains essentially intermittent in supply both of sewage and of air.

In a percolating filter, however, the aëration of the bed is continuous, and the supply of sewage may be either continuous or intermittent. Percolating filters differ in the manner in which aëration and liquid application are effected.

If the aëration is at all times sufficient (but not excessive), so as to maintain the bed in the highest degree of efficiency, the daily amount of sewage that can be purified adequately by passing through the bed will depend upon the method of application.

If sewage is applied continuously, in a fine shower over the entire surface of the bed, more can be purified per day than if the application is intermittent, for by means of steady application of liquid the particles of filtering material become uniformly coated with liquid seeping toward the bottom. The thinner the films of liquid covering the filtering material, the more perfect the aëration and the longer the sewage in passing through the bed.

But continuous application of sewage in minute quantities over a large area and with uniformity is much more difficult than intermittent application of larger quantities at intervals. Consequently frequent application of small doses of liquid upon portions of a filter is more common than continuous application over the entire surface of the filter, where the liquid is applied by sprinklers.

We may classify percolating filters, for purposes of description, according to the methods adopted for distributing the liquid over them, as follows:

1. Filters built up of one or more layers of coarse material covered with finer material upon which the sewage is introduced; the fine material serving to distribute the liquid so as to allow it to percolate slowly down through the coarser.

The difficulties to be overcome in this system are (1) aëration of the lower layers of the filter; (2) prevention of clogging of the fine layers; (3) prevention of too rapid percolation through the fine layers. These may be overcome to a certain extent in several ways, some of which are described in connection with descriptions of patents to Mr. Sidney Richard Lowcock and to the writer.

2. Filters of coarse material only, upon which the liquid is applied continuously in drops. The greatest difficulty in this

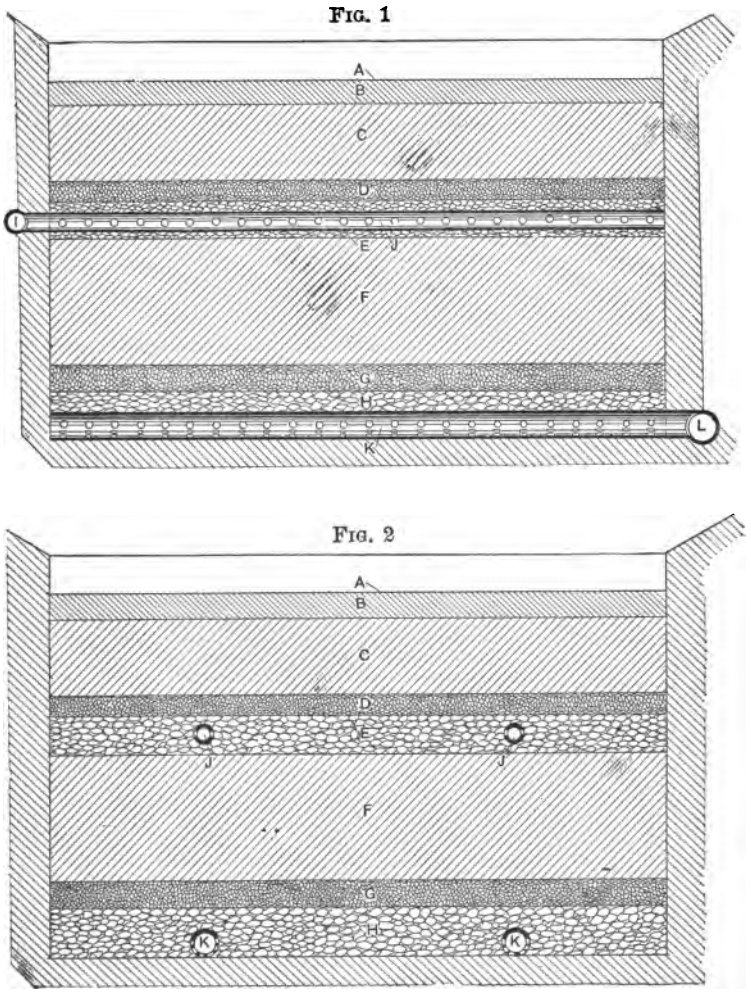

Fig. 30. Lowcock's aërated filter, 1894.

system is due to clogging or to freezing of the dripping device. Stoddart's patent illustrates this type.

3. Filters of coarse material upon which the liquid is applied

continuously through moving distributors, so that the shower is constantly shifted from one portion of the bed to another. Such filters are usually of a circular plan, and the distributor is carried on a radial arm.

4. Filters of coarse material upon which the liquid is applied at frequent intervals in showers or sprays caused by ejecting it from nozzles. The best known system of this kind is the "Chesterfield."

Illustrations of these various systems will be taken, as before, from American patents.

Patent No. 530,784, issued December 11, 1894, to Sidney Richard Lowcock, has received considerable exploitation in Great Britain, although the writer knows of no installations avowedly under the patent in the United States.

The principle of Mr. Lowcock's patent is illustrated in Fig. 30.

The specification states: "The action of the filter is as follows: The liquid to be purified is applied to the surface of the filter at *A*. Air or oxygen is forced into the body of the filter through the perforations in the pipes *J*, *J* embedded in a layer of gravel or stones *E*, and the said air or oxygen is distributed through the whole material of the filter. The downward flow of the filter is retarded in the upper portion of the filter by the fine material of which the said upper portion is made and by the pressure of the injected air, and the flow of the liquid is accelerated in the lower portion of the filter by gravity and by the pressure of the injected air. The uppermost layer or layers of the filtering material are charged with the liquid, which passes slowly downward from them in thin films over and between the coarser grains of the material forming the lower and principal part of the filter. The interstices in the lower part of the filter being larger than those in the upper part, the said interstices are not filled with the liquid, which runs over the grains or particles of the filtering material leaving the said interstices

so far unoccupied by liquid as to permit of the free circulation in the filtering material of the introduced air or oxygen. By this division of the liquid its absorbing surface is enormously increased, and the liquid becomes rapidly charged with the air or oxygen to which it is exposed.

"The pressure at which the air or oxygen is introduced into the filter must be below that at which the filtering material would be disturbed and blow-holes formed. I have found that a pressure equal to a head of three inches of water in a filter having a total depth of three feet and in which the air or oxygen is supplied at a depth of eighteen inches from the surface of the filter, answers well in practice."

The claim is as follows:

"The herein described apparatus for the filtration and aëration of liquids, the same consisting of alternate layers of fine and coarse filtering material, perforated air-conveying pipes located in a layer of coarse filtering material and connected with a main air pipe through which a continuous current of air or oxygen may be forced under pressure into said perforated drain pipes located at the bottom of the filter in a layer of coarse material, and a main drain connected with said pipes below the level of the bottom of the filter, substantially as specified."

RESULTS SECURED WITH LOWCOCK FILTERS AT MALVERN, ENGLAND, OCTOBER 8, 1895.

	Tank effluent applied to filter.	Effluent from filter.	Percentage of reduction.
Free ammonia	4.00	1.20	70
Albuminoid ammonia . . .	0.35	0.07	80
Oxygen consumed	1.70	0.40	77
Chlorine	20.00	24.00	....
Nitrogen as Nitrites and Nitrates	traces	2.68	....

In this patent of Mr. Lowcock it is of interest to note that the air supplied is introduced under pressure. It escapes below,

with the effluent. The depth of seal, fixing the pressure of the air in the bed, is therefore of great importance.

"The percentages of reduction are calculated on the tank effluent; if calculated on the sewage, the results of the whole treatment, tank and filter, would be a reduction of considerably over 90 per cent."

"In the Lowcock filters constructed at Tipton in 1896, the sewage had also been preliminarily treated with lime and alumino-ferric in precipitating tanks. The filters were 3½ feet deep, with a bottom of coarse coke, a body of coke breeze, and a top layer of fine broken limestone and sand. The outlets of the filters are always open, and during the supply of clarified effluent for twelve hours daily, air is forced in at a pressure of one half inch of water. Since August, 1898, the rate of flow has been at the rate of 240 gallons per square yard per day. The analyses given as an average on nine months are:

PARTS PER 100,000.

Effluent.	Solids.			Chlorine.	Ammonia.		Oxygen absorption.	Nitric. N
	In solution.	In suspension.	Total.		Free.	Albuminoid.		
Tank .	82.7	1.6	84.3	10.2	1.25	0.23	0.77	Nil.
Filter .	80.7	1.4	82.1	10.0	0.27	0.05	0.22	0.74

thus showing a purification of the tank effluent of 75.7 per cent calculated on the organic ammonia, and 68.5 per cent on the oxygen absorbed; if calculated on the raw sewage, these percentages would work out at over 95 per cent." *

Patent No. 607,426, to W. M. Ducat, next demands our attention. The principle of this filter is shown in Fig. 31. The liquid is distributed over the bed uniformly and seeps downward through the mass of filtering material, which is arranged in layers with drain pipes at different elevations.

* Rideal, pp. 212, 213.

The principal feature of this invention is the construction of the walls of the filter of drain tiles set at an angle inclining slightly inward, so that although the sides of the filter beds are perpendicular, they are open to air at any point.

As with the Lowcock filter, the writer knows of no installation

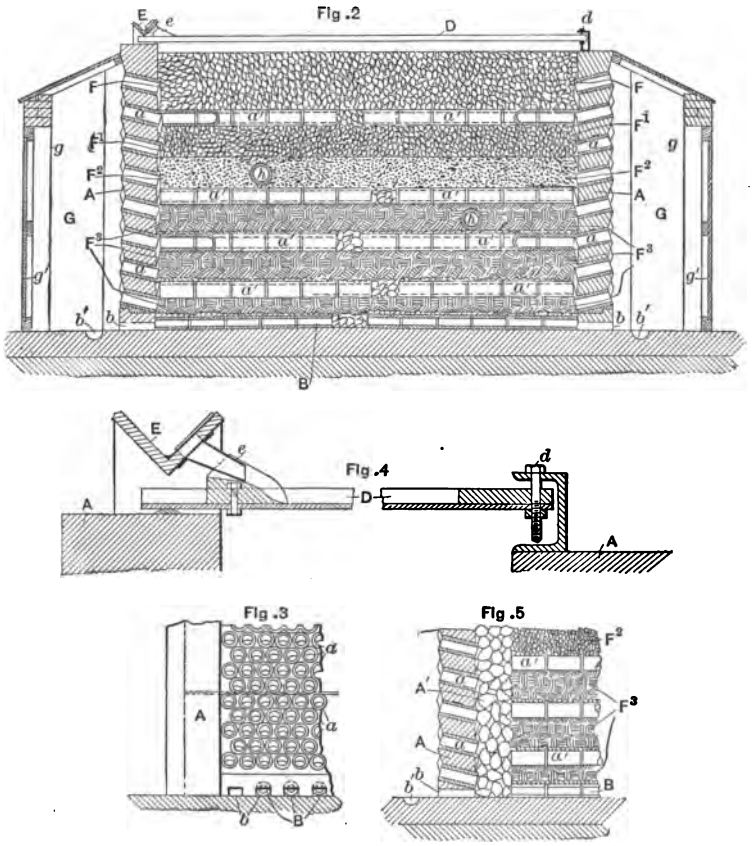

Fig. 31. W. M. Ducat's percolating filter, 1898.

of this system in the United States; but Mr. Rideal, on pages 215, 216, and 217, describes installations of Colonel Ducat at Hendon and at Sutton, and gives the following analyses of the sewages and the effluent:

SUTTON SYSTEM.*

Parts per 100,000.

	Cl.	Oxygen absorbed in four hours.	N as nitrites.	N as nitrates.	Free NH_3.	Albuminoid NH_3.	Suspended matter.	Residue on micro-filter millimetres per litre.
Crude sewage	12.8	6.49	.021	None	12.53	1.13	85.76	3000
Tank effluent	12.8	3.06	.301	.751	3.85	0.60	5.1	213
Filtrate from coke breeze	12.8	1.19	.087	1.99	1.25	0.316	1.35	23

"The average results in his table I have calculated, for the purpose of comparison, to a uniform chlorine content of 12.84 parts, which is the average given for the Sutton crude sewage."

DUCAT FILTERS AT HENDON.†

	Oxygen absorbed.	Free ammonia.	Albuminoid ammonia.	Oxidized nitrogen.
Sewage, Oct. 14, 1898	14.72	8.7	1.6	...
Filter effluent, do.	0.78	0.3	0.094	.477

Patent No. 624,985, issued to W. D. Scott-Moncrieff, has been referred to and illustrated in a previous chapter. (See Fig. 12.) It is of peculiar interest in this connection because it represents an attempt to divide the process of aëration into a large number of successive steps and thereby to accomplish complete aëration with the least possible amount of filtering material. Strictly speaking, this invention represents a very large number of very shallow percolating filters, which are arranged one above the other so that the liquid may drip from one to the other. The supply is rendered intermittent by dosing tanks arranged to dip and discharge their contents each time they become filled to a certain height.

Dr. Rideal gives the following as the results of his analysis of

* Rideal, p. 190. † Rideal, p. 216.

sewage and effluents in the Scott-Moncrieff system at Caterham Barracks, England:*

	Raw sewage.	Tank effluent.	Finished effluent.
Chlorine	15.1	14.1	13.3
O consumed	14.97	9.25	2.71
Nitrous nitrogen	trace	trace	0.346
Nitric nitrogen	...	...	9.0
Organic nitrogen	4.0	2.7	0.67
Ammoniacal nitrogen	13.2	14.9	5.0
Total nitrogen	17.2	17.6	15.02

The percentage purification was:

	Oxygen consumed.	Organic nitrogen.
Raw sewage to tank effluent	40	32.5
Raw sewage to finished effluent	82	83

The extreme strength of the sewage is to be noted.

Patent Nos. 800,187 and 808,411 issued to the writer illustrate means for aërating deep percolating filters or combinations of percolating filters with contact beds; the one actuated by the weight of a dose of liquid, and the other operated by an induced draught. These are illustrated in Fig. 32 and Fig. 33. The filter beds at Fort Des Moines, Iowa, are operated under the system shown in Fig. 32, although these beds are not as deep as the writer would prefer to build beds under this system, or composed of material of the most desirable degree of fineness. They have been adapted from another design, as will be explained in a later chapter. The following claim is sufficient to explain the system:

"In a device for aërating polluted liquids, a bed of suitable material for receiving the liquid and adapted to allow it to

* Rideal, p. 251.

percolate downward; means for distributing liquid in the upper portion of the bed in sudden doses to fill the interstices in the filtering material in said portion and to entrap the air beneath;

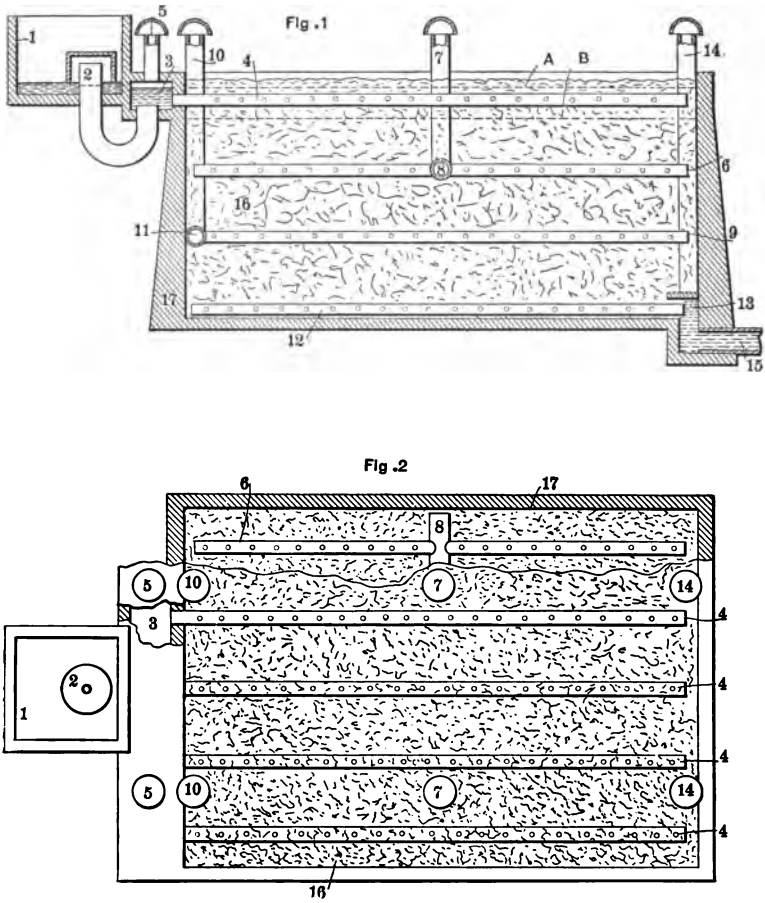

Fig. 32. Venable's "breathing" percolating filter, 1905.

in combination with channels arranged throughout the bed in sets at different elevations, all channels having openings into the bed, and each set provided with one or more separate passages to the outer air, through which foul air entrapped beneath

the dose may be expelled, and fresh air drawn in after the passage of the dose."

In practice the writer finds it advantageous to construct the

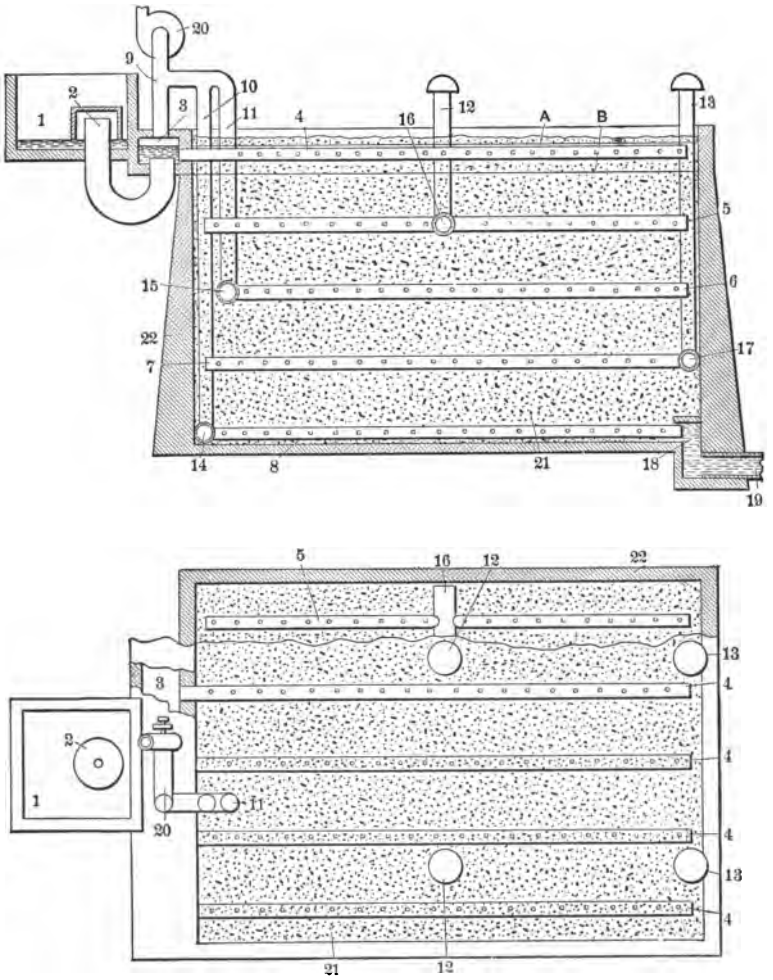

Fig. 33. Venable's artificial draught percolating filter, 1905.

various channels shown in the diagram as drain tile with open joints in layers of very coarse gravel or broken stone.

The other arrangement shown in Fig. 33 is adapted to

draw air by artificial draught through different layers of the bed for the sake of purifying them, by which the bed becomes divided into different zones, somewhat as in the case of the Scott-Moncrieff arrangement. It is important in operating a bed of this character that the amount of air drawn through shall be in some proportion to the amount of oxygen that is actually required for the aëration. A quantity of air several times as great as required is not harmful, but if this quantity of air is many times that required, the bed has a tendency to become clogged. The following claim indicates the scope of this invention:

"In a liquid aërating device a bed of material adapted to receive the liquid and to allow it to percolate downward, means for distributing the liquid in the upper portion of the bed and means for withdrawing the liquid from the lower portion of the bed, in combination with sets of channels embedded in the bed at different elevations and provided with openings into the bed, alternate sets connected to fresh-air inlets and the other sets to an exhaust or draught that operates continually, drawing air through the material composing the bed between the sets of channels."

The dosing siphon is perhaps the simplest and most reliable device for charging filter beds. But to obtain best results with doses applied to the filters just described, the beds should be deep, the filter material fine, and the doses small and suddenly applied.

In those cases where the beds are designed to have the charge of liquid communicated to them in doses, automatic siphons and valves, such as have already been described, may be employed; but wherever the liquid is to be applied in a shower or showers, suitable devices of a different kind are required, of which many have been invented.

The Stoddart distributor is illustrated in Fig. 34. It consists of a set of troughs, with notches to permit liquid to

escape at intervals, and drip pegs on the under side, together with necessary supply channels. A device of this character requires very accurate setting and careful attention to see that the notches do not become clogged. To operate this system,

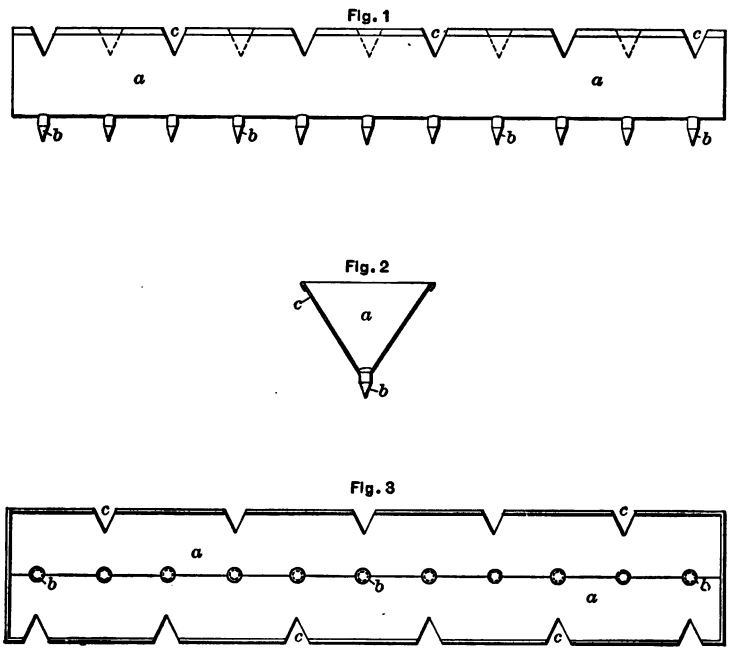

Fig. 34. Stoddart distributor, 1899.

it is necessary that the rate of flow of the sewage into the trough be fairly constant. The writer does not know of any installations of the Stoddart distributor in the United States, although there may be such.

There have been a number of designs for distributors to be mounted above the bed of circular form, and to revolve so as to distribute the sewage from arms placed radially. Such a system is shown in Fig. 35, which is taken from Patent No. 678,979, issued to G. E. Ridgway.

The Scott-Moncrieff distributor, shown in Fig. 36, is de-

scribed in Patent No. 710,525. It consists of a distributing channel extending diametrically across a circular bed, the ends

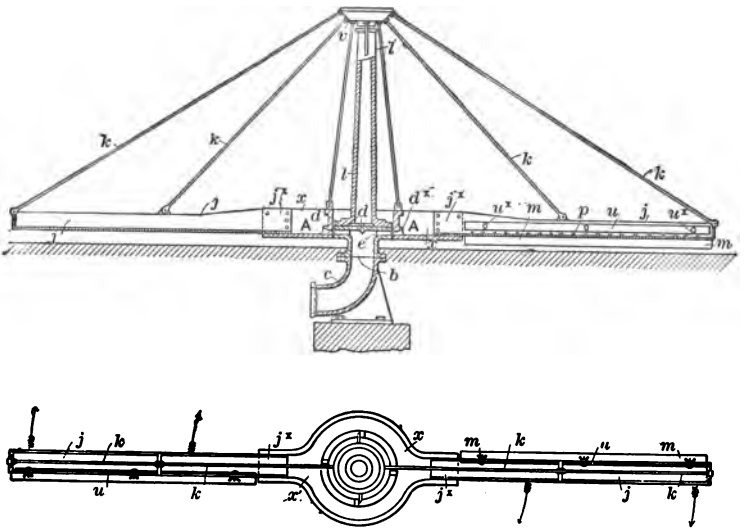

Fig. 35. Radial distributor of G. E. Ridgeway, 1901.

of the channel being mounted on a track, and the center upon a small turntable.

Of the percolating filters to which the liquid is applied with

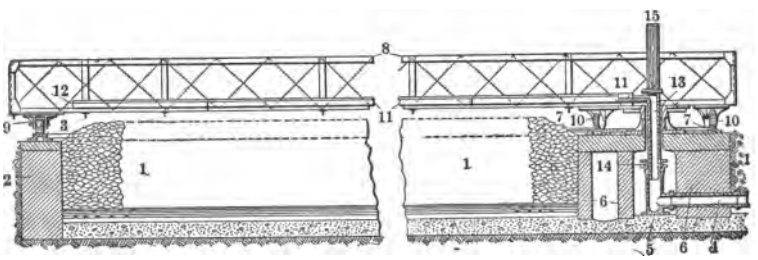

Fig. 36. Radial distributor of Scott-Moncrieff, 1902.

jets or sprays, those at Chesterfield, England, have been most frequently described, and are the best known. In these the sewage is ejected through numerous small nozzles, each jet

striking a strip of spring metal, and being thereby reduced to a spray. As the metal vibrates, the spray is well distributed. The jets operate intermittently, by air pressure applied to the sewage in a closed tank.

Another type of spraying jet is used at the works recently constructed at Columbus, Ohio. There the jets are caused to spread by striking cones which are set with their axes in the center of the jets, while the distance that the spray falls from the center of the jets is varied by varying the pressure.

Percolating filters when designed properly and operated under careful supervision are undoubtedly far more economical than other styles of filters used in sewage purification, but they require a greater amount of skill and a greater amount of watchfulness than are necessary with some other systems. The cost of land in the vicinity of large cities is so great that it is important to have the purification system occupy as small an area as practicable, while on the other hand every large city should be able to have the purification works constantly under the supervision of experts.

The amount of sewage that can be purified per cubic yard of filtering material in a percolating filter varies with conditions. In large installations operated under careful control it is undoubtedly practicable to treat much larger quantities per cubic yard of filter than in small installations incapable of adjustment; and where percolating filters are designed for small communities they should be much larger than the minimum theoretically required. In every case of a large city, the proportioning of the beds should be made as the result of experimental treatment of a portion of the sewage to be handled, in filters composed of the same material that it is proposed to use in the complete installation. In general, however, it may be stated that the quantity of ordinary domestic sewage that can be treated successfully in percolating filters varies from 1,000,000 gallons to 1,500,000 gallons per acre per day, — which requires

an acre of filter beds for from 10,000 to 20,000 persons. Rates of filtration twice as great as this are claimed in some cases.

The following table compiled by Mr. George W. Fuller,* from reports of the Massachusetts State Board of Health, gives the performance of experimental percolating filters at Lawrence, Mass. These filters, and the method upon which they were worked, do not represent the best practice for percolating filters at the present time.

* Transactions Am. Soc. C. E., International Engineering Congress, 1904, Vol. LIV, Part E, p. 192.

TABLE 13.—SUMMARY SHOWING AVERAGE LAWRENCE DATA REGARDING RATE OF FILTRATION AND EFFICIENCY OF INTERMITTENT CONTINUOUS FILTERS.

Filter number.	Filtering material.			Years covered by averages.	Preparatory treatment received by influent.	Average number of gallons applied per acre daily for 7 days in the week.	Influent.					Effluent.				
							Parts per million:				Bacteria, per cubic centimeter.	Parts per million:				Bacteria, per cubic centimeter.
							Oxygen consumed.	Nitrogen as: Ammonia.		Chlorine.		Oxygen consumed.	Nitrogen as: Ammonia.		Nitrates.	
	Kind.	Depth, in inches.	Size.					Alb.	Free.				Alb.	Free.		
134	Broken stone.	60	¼ to 1 in.	1900–1901.	Septic tank (anaërobic broken stone).	1 097 700	19.2	1.78	40.2	104.7	391 300	10.3	1.07	21.8	16.41	67 400
135	Broken stone.	216 and 144*	¼ to 1 in.	1900–1902.	Strained through coal.	1 349 200	28.4	3.66	43.5	90.7	829 600	13.2	1.53	20.6	18.60	160 800
136	Broken stone.	216 and 144*	¼ to 1 in.	1900–1902.	Septic tank.	1 172 100	25.4	3.08	44.8	109.8	676 300	13.6	1.52	22.6	21.30	65 700

* Depth of material reduced in June, 1900.

CHAPTER IX

SUMMARY OF ENGINEERING PRINCIPLES REGARDING THE DESIGN OF SEWAGE PURIFICATION WORKS

1. **Chemical Analysis of Sewage.** Sewage is of such varying character that it is impossible to formulate any single rule for its treatment for the removal of sludge and of chemical substances injurious to bacterial action before the bacterial treatment proper is begun. Therefore the first thing to be done in the case of municipal sewage is to determine the character of the sewage by chemical analysis. This analysis should show not only the amount of organic matter to be dealt with, but the quantity and nature of inorganic matter, such as iron, sulphur, lime, etc., which occur in all sewage to some extent, as well as products derived from various manufacturing and industrial establishments. The hardness or softness of the original water supply, and the proportion of sediment contained therein, are also important, as sediment originally contained in the water must find its way to the sewage purification works, and must be disposed of there.

2. **Inspection of the Sewerage System.** Often it will be found that a given system of sewers receives sewage for the most part of comparatively uniform character, easily treated by bacterial methods, and that there are only a small number of establishments that discharge into it injurious substances. Gas-works, tanneries, laundries, dye-houses, refineries of various kinds, garbage reduction plants and chemical industries, are among the institutions that are likely to discharge injurious substances into the sewage. Where these are few in number it will often be found feasible to dispose of their wastes by separate treat-

ment so as not to permit them to enter the sewers at all, or, if at all, only after their obnoxious character has been removed. This requires an inspection of the entire sewerage system, the analysis of suspicious discharges into it, and the separate chemical treatment or other provision for the injurious ones. If separate treatment is impossible in these cases it will be necessary to provide special treatment of some sort at the sewage purification works, before the bacterial process can be applied with the best results.

3. Quantity of Organic Matter and of Water to be Treated. If the sewerage system is small, and known to receive nothing but domestic sewage, chemical analysis may not be necessary to an experienced engineer, who by examining the nature of the water supply and the physical appearance of the sewage, ought to be able to tell whether any particular difficulty is likely to be met with in the treatment. In such a case the engineer should proceed to determine the number of persons contributing to the sewage, the total quantity of water discharged intentionally into the sewers, and the volume of sewage to be treated daily at the works. If the volume reaching the works is materially greater than the water intentionally discharged into the sewer, as is often the case, the sewage has been diluted by ground water. In such a case either the sewer must be made tight, or the works larger than otherwise necessary, to handle the extra water. If the volume of water reaching the works is less than that admitted to the sewer, there is a leak in the sewer that must be found and remedied. Dilute sewage is easier to treat than concentrated sewage, but it requires larger works to remove the same total quantity of impurities. If the sewage to be treated is combined domestic sewage and street drainage, provision must be made to by-pass storm water.

4. Examination of Site of Purification Works. The site of the purification works is to a certain extent fixed by the location

of the sewer. The selection of the most suitable disposal system depends almost entirely upon the character of this site, and the materials available for constructing the works. If the sewer outfall is located in a place exceedingly unfavorable for the construction of a disposal plant, it will be necessary to locate the disposal plant elsewhere and to connect it with the sewerage system by a new sewer, and with a pumping plant, if sufficient natural fall is not available. In the examination and selection of a site the following matters should be borne in mind:

1. The elevation of the land and its natural contour, for the construction of the works without excessive grading, and for the easy disposal of the effluent by gravity.

2. The presence or proximity of sand, gravel, and other suitable materials for construction.

3. The possibility of utilizing the purified effluent for irrigation, and the nature of the ultimate disposal of the purified water.

5. Determination of Purity to be Secured. The degree of purity required must be determined from local conditions, — chiefly the character of the stream into which the water is finally discharged. In many cases, however, the degree of purity that can be secured is limited by the money available for the construction of the works, which seldom exceeds the sum absolutely necessary to avoid nuisance and prevent claims for damages by parties who may be obliged to use the water from the stream into which the discharge flows. It is, however, possible to secure purification of any degree, from mere removal of suspended solids to the production of an effluent suitable for drinking. It is all a matter of cost of construction and repetition of treatment.

6. Selection of Treatment to be Employed. The selection of a system of treatment depends upon the site and the material

available. It is, in all cases, a matter to be determined by the judgment of the engineer. In certain extreme cases the best general system to be adopted will be so clear to the experienced man that only one set of plans need be prepared, but in many cases it will be desirable to prepare a number of studies and to select the most economical after making a careful estimate of cost of construction and of operation. Extreme cases are:

(*a*) Where the site is a level or gently sloping area of coarse sand, with but little loam above it, suitable for sand filtration without expensive preparation, sufficiently elevated to afford ample fall for underdrainage, of sufficient superficial area and not expensive to acquire, and where the climate is not more severe than that at Massachusetts. In this case, sand filtration, with preliminary straining or precipitation, is without a competitor in both first cost and cost of operation. But if sand has to be transported to the site, or if land is expensive to acquire, this system will find competitors in more elaborate systems requiring less area and less material for construction.

(*b*) Where the site is a gently sloping area of clay soil or stiff loam, or of sand not suitable for sand filtration; where the price of land is not excessively high, and the hydraulic fall is ample, a system of contact beds in combination with a septic tank is most likely to be found cheapest to secure the required results. Such a system is intermediate in regard to area required and total volume of materials used in construction between sand filtration and percolation through deep aërated filters. It is more likely to get out of order than the system of sand filtration, and less likely than the percolating filter.

(*c*) Where the price of land is exceedingly high, and where pumping must be resorted to, to secure sufficient hydraulic fall for treatment, deep percolating filters with septic treatment are most economical. They require careful watching, and in consequence are much more likely to prove satisfactory in large installations under careful and constant supervision, where

conditions are practically constant, than in small plants that do not receive daily attention.

One of these systems may be used in conjunction with another, often to advantage, to adapt the works to the contour of the ground, or to secure a very high degree of purification by repeating the process of aërobic action.

Some idea as to the variation in the size of a plant required to treat a given volume of sewage satisfactorily by these various systems can be gathered from the fact that by sand filtration alone, under ordinary conditions, some 50,000 gallons of sewage may be treated per acre per day, although in poor sand only half this much can be handled successfully; while in a percolating filter in perfect condition, supplied with septic effluent in a condition for rapid oxidation, practically under laboratory conditions, as much as 5,000,000 gallons per acre per day may be successfully handled. With 100 gallons of sewage per capita per day this would mean that one acre of sand filter would accommodate 500 persons; while with a percolating filter the same area would accommodate 50,000 persons, — one hundred times as many. In view of such facts it would seem that the number of places where large cities can afford to use sand filtration systems will be found smaller from year to year, as the value of land increases, even where suitable land for sand filtration is available.

Besides these general principles governing the selection of the system to be adopted and the determination of the results to be aimed at, there are a number of principles applicable to the design of the various structures and to their operation, which may here be summarized for convenient reference.

7. **Sedimentation.** Sedimentation must be as rapid as possible, to avoid its becoming complicated by septic action of an advanced stage, forming a sludge that will not settle, but escape from the tanks to the filter beds. It should take place

in more than one compartment in a series. It may be accompanied by straining or skimming. It may be assisted by chemical precipitation. It must be accompanied by provision for frequent removal of precipitated materials and their disposal by other means. The time required for sedimentation varies with the character of the water supply. If this is very muddy, and the mud subsides very slowly, the time required will be several hours, — almost as great as in some tanks called septic tanks.

8. Septic Action. Septic action must be adjusted to the subsequent treatment. It should be as short as possible where sand filtration is the next step in the process, preferably being mere precipitation of the heavier organic solids. For percolating filters it may be longer, the desirable period varying from about six hours to twenty-four hours according to the strength and the freshness of the sewage reaching the tank. The best period should be determined by experiment in each installation wherever practicable. Where followed by treatment in contact beds septic treatment may perhaps be a little longer than where followed by percolation through deep filters, but this is not yet fully demonstrated. In each case the period of septic treatment must be adapted to the subsequent treatment. Where septic treatment only is used, followed by disposal by dilution in an exceedingly great volume of water, the septic process may be carried to an extent that would never be advisable if any kind of filtration were to be employed instead of dilution. Methods of removal of sludge from septic tanks should vary with the size of the system. Small systems should dispose of the sludge with the effluent, large systems should dispose of it by some method of mechanical removal.

9. Drainage of Filter Beds Affected by Capillarity. The behavior of granular material in deep sand filter beds used for

sewage purification is a subject that seems not hitherto to have received the careful and systematic study that it deserves. What has been done in investigation in this field has been largely in connection with filter beds in which various sewages were being tested, and the object has been to determine by experiment, approximately the amount of purification secured by various arrangements, empirically selected.

The writer has made many experiments as to the draining of filter beds with systems under operation, as well as with several small laboratory installations, and became convinced that some systematic experiments upon the standing of and the flow of water in gravel and sand under certain conditions, not accompanied by bacterial action on a large scale, would throw light upon this problem. Accordingly he made a series of experiments, the results of some of which are here recorded for the benefit of others interested.

The first series of facts that were ascertained bears upon the problem of draining filter beds, and aërating them to the bottom.

If a concrete receptacle with a level bottom be filled with sand, and porous pipes be embedded in the sand, resting upon the bottom of the bed, those pipes cannot entirely drain the sand, because of the capillary action between the sand and the water. The head resisted by this capillary attraction varies with the fineness of the sand. Experiments were made to determine this head.

Glass tubes, one inch in inside diameter, were fitted with corks, the corks being pierced by smaller glass tubes, to allow the inflow of water. The smaller tubes were then temporarily closed, and the one-inch tubes filled with water. Then gravel and sand of the degrees of fineness tested were dropped in and allowed to settle through the water. In all cases the material was carefully washed before use. After the material had settled, the smaller tubes were opened, and inserted in a tray of water. The apparatus was allowed to stand over night, and the water

level in each of the large tubes above that in the tray was read in the morning.

The conclusions derived from these and other experiments were as follows:

(*a*) The head of water in inches, that will be supported by clean sand and gravel, above the normal level of water in an adjacent pool, varies with the coarseness of the material from about one quarter inch in gravel containing no particles of less diameter than one quarter inch, to one foot in fine, clean sand, such as may be used in sand filters.

(*b*) It follows that drain tile embedded in sand and discharging without a trap, can only drain the material to an elevation of from one quarter of an inch to one foot above the bottom of the inside of the tile, when the sand is first deposited; and since the growth of bacteria decreases the voids, the elevation to which such tile will drain the sand becomes higher as the bacteria are established. Therefore, in a sand filter with impervious bottom, the sand for one foot or more above the drain pipes is never drained so as to be aërated.

(*c*) If a sand filter is underdrained, as by resting upon a foot or more of fine gravel, with the outlet at the bottom of the gravel, the sand may be made to drain completely only by preventing the entrance of air into the gravel. If the gravel is drained, and full of air at atmospheric pressure, the water level in the sand will be from an inch to a foot or more above the level where the sand rests upon the gravel. Where filters are alternately filled and emptied, as in contact beds, it is practicable to keep air from entering from below while the beds are draining; and a horizontal layer of coarse sand underdrained by gravel may be adequately drained, while a continuous filter constructed of the same materials would not so drain.

(*d*) Where a surface layer of sand is used to distribute the liquid over a percolating filter of coarser material, it will seal and keep sealed the surface of the bed so as to prevent aëration

therethrough. The seal remains in the sand, though water does not show on the surface. Bacteria, surface dirt, and scum very greatly increase its effectiveness; and in sand filters it may easily become so effective that the filter is never aërated at all except through the drain pipes. Raking and furrowing the filter help to destroy or prevent this seal from forming.

(*e*) Unevenness in the fineness of filtering material very greatly affects draining; and the deposition of any layer or pockets of excessively fine material in a bed, as may readily occur if natural material is shoveled into pits and rehandled, will seriously and injuriously affect the working of the bed.

(*f*) Drain tile in sand, unless their upper portions are located above the level at which capillary action supports the water, cannot be channels for the circulation of air into or out of a filter bed, as they are completely surrounded by water held in place by capillary attraction.

While these conclusions may be deduced from theoretical premises, the writer has derived them also from independent experiments and experience.

10. Rate of Flow of Water through Clean Sand when the Interstices thereof are Completely Filled with the Water. Another series of experiments was carried out for the purpose of determining the rate of flow of water descending vertically in sand, and filling all the interstices therein. The method employed was to fill a tube with water, and then to drop into it the material experimented upon, so that all air was excluded. The water was then adjusted to a few inches in depth above the material tested, and then the drain below was opened. By observing the rate at which the water level fell in the large tube, the rate of flow was determined. The method might be improved, if great accuracy were aimed at; but it answered well enough for the rough approximations desired by the writer at the time.

The tube was then drained and the seal broken in the small tube at the bottom, so that air could issue freely therefrom. Small doses of water were then poured into the top, and the rate at which they descended through the sand ascertained.

To determine the tendency of water to spread out laterally while descending through sand, two plates of glass were mounted in vertical planes a half inch apart, and the space filled with sand. Water was then poured upon the top edge, or surface, in places, and its descent against the glass observed.

(*a*) The water fell with great rapidity in all cases, even where very fine sand was used. It descended freely at a uniform rate of from a foot a minute to a foot or more per second, depending upon the fineness of the sand, and independent of the size of the dose.

(*b*) There is little or no tendency for the water so descending to spread out laterally. It descends as a body.

(*c*) The water leaves the sand moister after the passage of the main volume, or dose, and thus the dose becomes smaller as it descends, while the moisture left behind seeps more slowly to the bottom through the interstices which it only partially fills.

(*d*) The presence of bacteria retards the passage of the dose considerably, and retards the drainage of the moisture left behind the dose very much.

(*e*) When the dose is very shallow, it percolates but a short distance as a body before it becomes distributed by leaving moisture behind it so as not to fill the interstices of the sand. The finer the sand, the shorter is the distance before this dispersion takes place.

(*f*) Stratification of the filtering material seriously interferes with the actions described. Encountering a finer layer of material causes the dose to spread; but encountering a coarser layer does not cause it to collect rapidly into streams (unless the layer is very coarse and deep).

11. Rate of Downward Flow of Water through Clean Sand when the Water does not Fill the Interstices in the Sand. (*a*) When water was applied to clean sand in exceedingly small doses — about one half of an inch in depth at a time — and allowed to percolate a depth of several feet, it was found to flow through the sand more rapidly than anticipated. Experiments of applying the water slowly with a burette, in drops, also showed rapid seepage through the sand when the sand was clean. Even when applied at very slow rates, only three minutes were required for it to seep through to the bottom of a three-foot layer. Presence of bacteria undoubtedly would retard the rate of flow somewhat, but no experiments could conveniently be made with the apparatus at hand to determine to what extent.

(*b*) The presence of bacteria in a filter composed of a bed of coarse sand or fine gravel covered by a layer of fine sand which is flooded with liquid, undoubtedly has an effect to secure more uniform distribution of the liquid percolating through the coarser material than is secured when the fine gravel is clean.

The general principles stated under headings numbered 9, 10, and 11 are applicable to all classes of filters. Some particular application of them to the special methods of treatment in use will be indicated now.

12. Application of Sewage to Filters. The application of the sewage must insure its percolation into or through all, or as much as possible, of the filtering material.

(*a*) Where applied to land it can percolate only very slowly, and must be applied slowly. It cannot be applied slowly and uniformly over a large area without great labor. Consequently it must be applied uniformly to a smaller area. This is done by applying it in ditches as in irrigation.

(*b*) Where applied to intermittent sand filters it must be spread over the entire area of the filter as uniformly as possible, and then allowed to percolate uniformly over the entire filter. If this is not done the filter will be overworked at some parts

and underworked at others. Consequently the filter beds should be of such size, in proportion to the rate of flow, that each bed in turn can be flooded within a comparatively short time, whereupon the sewage will be diverted to the next bed.

(*c*) Where applied to contact beds more leeway is possible, because the bed is filled and emptied regardless of where the sewage is applied. But, as fully discussed in the chapter on contact beds, the method of application greatly affects the capacity of the bed for producing a uniform effluent.

(*d*) Where applied to percolating filters the uniformity and rate of application of the sewage are of the utmost importance, for the time required for a particle of sewage to flow through such a bed diminishes much more rapidly than the rate of applying the sewage increases — perhaps as the square or a higher power of the rate of application. The rate at which sewage can be applied to a percolating filter is thus fixed by the hydraulic characteristics of the bed. By making the bed deeper, the purification secured may be increased, but the rate of application of sewage cannot be increased materially. By making the filtering material finer, the rate of application can be increased, provided the material is not so fine that aëration is impaired. The sewage may be applied intermittently, if the doses are very small and the filter is very deep.

13. **Sizes of Particles in Filter Beds.** For each size of filter and a sewage of certain concentration there is a size of particles of filtering material that gives most economical and efficient results. But it is impossible in practice to procure materials of precisely the best size, or to vary the size as the concentration of sewage varies, except to a very limited extent.

(*a*) The best size of sand to use is determined by the hydraulic principles of sand filtration. But as natural sands vary exceedingly, and as only natural sands are ordinarily used for this purpose, it is necessary to make mechanical analyses of

sands to determine whether they are suitable for filtration works, and to determine the area of beds using such sands necessary to treat a certain volume of sewage. The preparation of sand by screening or washing, so that it would be most suitable for use, while practicable, would be very expensive, and would make sand filtration works materially exceed in cost contact beds of the same capacity for sewage treatment.

(*b*) For contact beds the best size of particles is a matter still under discussion; and there is much reason to believe that where several contact beds are used in succession the first beds should be of coarser material than the last, and that where very concentrated sewage is to be treated coarse material is necessary. The size of particles in single contact beds varies from one quarter inch to two inches in diameter, smaller sizes predominating; and contact beds for a second treatment may have particles as small as one eighth or even one sixteenth inch in diameter, provided the preparation is such as to actually screen out smaller particles.

(*c*) Percolating filters may be made with very coarse or very fine material, but those most in use are of extremely open construction, with particles averaging in size as those in rather coarse contact beds.

14. **Material for Filter Beds.** Glacial sand and gravel, washed and screened, are the best materials usually available for filter beds in the United States. Broken crockery and hard burned brick are perhaps next best, but very difficult to obtain. Coke is much used in many places, but to be satisfactory it must be hard and comparatively pure. Cinders from coal that cannot be used to make a high grade coke, such coal as is mined in many parts of the United States, are very unsuitable because they rapidly crumble when kept constantly wet. Crushed stone may be used if the rock chosen is sufficiently hard and insoluble, and free from clay. Soft limestone is very

unsuitable, but very hard limestone will answer, though inferior to any natural gravel.

15. **Removal of the Effluent.** (*a*) From land treatment and sand filters, when at a sufficient elevation above natural ground water level, effluent piping may not be necessary. Otherwise underdrains should be placed at a distance of several feet below the surface. These should have sufficient grade to prevent water from standing in them at any point. The deeper they are from the surface, the greater the distance that they may be placed apart.

(*b*) From contact filters the liquid should be discharged with a rush, so as to scour the pipes clean of sediment and peaty deposit. The pipes should therefore be calculated to have a velocity of flow of some six to ten feet a second when the discharge commences. It is impracticable to discharge so rapidly as to have much effect toward scouring the filter itself.

(*c*) From percolating filters the liquid should run freely at the base. If conduits are used, they should be calculated so as to convey away all the liquid without ever becoming full.

16. **The Aëration of Filters.** Filters must be supplied with sufficient air to completely oxidize all of the organic matter in the sewage. The volume actually required is seldom in excess of the volume of sewage itself, but in many devices the supply of several times this volume is desirable. The forcing through a filter of a blast of air many times in excess of the maximum requirements has been found injurious, resulting in the formation of an insoluble earthy substance that is difficult to remove, just as too extended septic action produces a sludge that is hard to dispose of.

17. **Pipe Sizes.** Pipes in all parts of sewage purification works that carry sewage constantly should be calculated of proper size to do the work precisely as in a pipe sewer system,

so that they will never run full; but pipes on all intermittent lines should be calculated to run full, and ample fall should be allowed in the works to insure flushing. The utilization of all the available fall in sewage purification works is one means of securing best results with least expenditure.

18. **Freezing.** Freezing is less likely to take place in systems worked at a rapid rate than those worked at a slow rate. Land treatment is most easily interfered with by freezing, sand filtration next, contact beds very little. Percolating filters are not likely to freeze when worked at rapid rates except when some part of the design, such as spraying devices, exposes the finely divided liquid unduly before it enters the beds. If artificial heating is resorted to at all, it seems preferable to heat the sewage rather than to heat the air. Freezing of filter beds is due to exposure of much surface to cold air, not to heat given up to air absorbed in the process of purification, which is very slight even in zero weather.

19. **Maintenance and Operation.** The operation of any system of sewage purification requires some intelligent supervision; and the operation of a system that has been carefully designed to secure effective purification with a moderate investment requires skillful attendance of a high order. Undoubtedly many of the smaller installations that have not proven satisfactory have failed because of lack of intelligent supervision. The most important matter in operation is to see that all parts are kept in good working order mechanically; the next is to see that the septic process or precipitation process is properly carried out, and sewage free from sludge and in a condition for oxidation is delivered to the beds; the next is to see that no bed is overworked. The design should make it possible to attend to these matters of regulation by adjustment; but the operator must understand when to act and what to do.

20. The Significance of Analyses of Effluents. The best summary of opinions regarding the significance of analyses of effluents that has come to the attention of the writer appeared in the *Engineering Record*, August 5, 1905, and is here reprinted. It bears its own introduction.

The interpretation of the analyses of effluents from sewage disposal works is a matter that is best left to analysts. The engineer has to venture on such interpretations so often, however, that attention is called to a paper on the subject by Mr. Earle B. Phelps in the "Technology Quarterly" for June. This paper is a rather long contribution from the sanitary research laboratory and sewage experiment station of the Massachusetts Institute of Technology, and the following notes give only the leading statements of the author under each head:

The subject of the quality of the effluents derived from a sewage filter has been considered from two totally different points of view, which have led frequently to conflicting opinions as to the results obtained. One view is based upon the actual work of the filter expressed in percentage efficiency, and necessarily takes into account the nature of the raw sewage. The other is based upon the quality of the effluent as shown by the analysis.

The expression, "percentage removal," sometimes called the efficiency of the filter, is of very little value in the comparison of systems which are not receiving the same sewage, for it is much easier to get a high efficiency, calculated in this way, on a strong sewage than on one which is weaker. On the whole, it would seem that a better interpretation of the analysis of an effluent can be made than this customary comparison with the raw sewage. A direct comparison of effluents derived from the same sewage will serve the purposes of the investigator fully as well as a comparison of the efficiencies, while the quality of the effluent is the final and practical criterion upon which the work of the filter must be judged.

Since the introduction of the more recent biological processes our ideas of purity of effluents have been gradually changing. In many of these processes, but most notably in the case of the continuous, or trickling, filter, a large amount of organic matter is passed through the filter, which upon examination generally proves to be of a peaty or humus nature, and incapable of further putrefactive change. Aside from the possibility of such material creating a nuisance by forming deposits behind milldams or in the lower reaches of the stream, it appears to be entirely harmless and non-offensive. Chemical analysis fails to distinguish between the ordinary putrescible matter of sewage and this non-putrescible material which results from the treatment of the sewage in the manner indicated.

This has led to the introduction of putrescibility, or incubation, tests which are now so commonly used. These depend, in general, upon the storage of the effluent in a bottle at summer temperature and out of contact with the air for a period of several days. Certain tests are then made upon this incubated sample to determine if it has undergone putrefaction. The determination of the oxygen consumed before and after incubation is the one most frequently employed. Many chemists determine the loss of dissolved oxygen and of nitrates either in the original effluent or after mixing it with certain quantities of aërated water or nitrate solution.

Attention has been called to the value of the nitrates in an effluent. Instead of adhering to the older view that all organic matter is harmful and must be kept below a certain maximum standard value, the more recent practice is to balance the available oxygen against the organic matter, and, if the former be found in excess, to consider the effluent satisfactory. The question remaining to be settled, and on which there are many views, is just how much of the oxygen is available, and how much of the organic matter requires oxidation.

There is a school of sanitarians who hold that, if a partially purified effluent can be supplied with sufficient available oxygen for the complete oxidation of the remaining organic matter, it may with safety be discharged into the stream, and the purification will be completely carried out within the stream. In justice to this view, it should be stated that what is here attempted is apparently not the protection of the streams from pollution by disease germs so much as the prevention of an apparent nuisance in, or fouling of, the stream. The evident intention is to keep the stream in such a condition that it may be rendered fit for domestic use by further purification of the water.

With our present knowledge, at least, this would seem to be the wiser provision. We know little, unfortunately, of the viability of disease organisms in sewage and of the effect of purification treatment upon them. While the ideal condition, and the one toward which sanitarians should ever be working, is the perfect purification of sewage from all pathogenic bacteria before discharge, it may nevertheless be better economy, with our present information, so to purify our sewage as to prevent it from seriously fouling the streams, and to thoroughly purify all waters taken from them for domestic use.

Nitrogen. According as the conditions of the purification process are aërobic and anaërobic, the nitrogen of the organic molecule may follow one or the other of two very different courses. In the slow sand filter, and also in the percolating, or trickling, filter, in both of which types there is a plentiful supply of oxygen, the course of all the nitrogen seems to be from organic molecule to ammonia, and thence to nitrites and

nitrates. In a very good sand filter as much as 99 per cent of the organic nitrogen may thus be accounted for. On the other hand, in the contact system of purification, while as much as 25 per cent of the total nitrogen may follow this course, a large part of the remainder is converted, under the anaërobic conditions of the reduction phase, into the amine form, and that these amines in turn react with the nitrites previously formed. This reaction causes a liberation of a large percentage of the total nitrogen in the form of the free gas. As much as 50 per cent of the total may thus disappear. In the septic tank also nitrogen is liberated, but in this case the liberation is brought about by the direct action of the micro-organisms upon the organic molecule. Knowledge of the actual amount of nitrogen escaping from the septic tank or from a contact filter is obviously of great importance, and the value of the total nitrogen determination as an index of the work of these processes is evident.

The free ammonia being a transition stage in the purification process is not of much significance in those rapid processes of treatment where a large amount of ammonia is produced in a short time. In very pure effluents, such as those from sand filters, the free ammonia being extremely low is a valuable index of the work of the filter. In such cases it may be said that it runs very nearly parallel with the organic nitrogen as well as with the bacteria.

The nitrites are likewise transition substances, and are extremely unstable. In filters of the oxidizing type, nitrites are a valuable indication of the condition of the filter. When such a filter is running at its best, the nitrites will, as a rule, be low. A marked increase in the nitrite value is then an indication that something has gone wrong with the filter. Considered with reference to the stream, they are of value in that they possess available oxygen, although as a rule the amount of nitrites present is too small to be of any value in this respect.

Nitrates are the final product of the oxidation of the organic nitrogen. Their appearance in sand and trickling filters is, therefore, of great significance, in that they indicate the actual amount of work done by the filter. Their relation to the quality of the effluent is also important. They carry the largest amount of the available oxygen of the effluent, and it is now believed by most authorities that they may be entirely consumed in the process of secondary oxidation, which takes place in the stream after the discharge of the effluent. Any arbitrary standard for purity for effluents from such filters should therefore contain, in addition to a maximum allowable amount of organic matter, a minimum amount of nitrates. In such a case mere dilution of an effluent could never bring it to the desired condition, while with high nitrates an effluent will not generally become foul or offensive by secondary putrefaction. Authorities are not yet in agreement as to the significance of nitrates in

the contact filter effluent. Mr. Phelps' opinion is that since nitrates are used up in the work of the filter, their appearance in the effluent merely indicates that an excess has been formed, and that if necessary the filter may be worked harder. Perfectly stable effluents may be obtained practically free from nitrates.

CARBON. The organic carbon is determined only partially by the oxygen-consumed test. While this test has a certain value in the comparison of effluents from similar filters, and especially as a quick method for controlling a filter, it has no scientific basis whatever, and the relation of its results to the total carbon is unknown. The oxygen-consumed determination is of undoubted value in the putrescibility tests.

OXYGEN. Free dissolved oxygen in the effluent represents a reserve oxidizing power by which the effluent can further purify itself. Its presence also indicates that there has been a sufficient supply of this necessary element during the process of purification. The effluents of oxidizing filters, sand and trickling filters, should always contain free oxygen. If all the oxygen is used up, then the process is not being properly worked. In the contact-filter effluent the free oxygen has another significance. The supply of oxygen being necessarily somewhat limited in this type of filter, it will become most completely exhausted in that filter which is doing the most work.

PUTRESCIBILITY TESTS. By putrescibility we denote that property of the organic matter in a sewage or effluent which causes it, under certain conditions, to undergo putrefactive change. For the purposes of sewage work, the organic matter dealt with may be roughly grouped into these two classes, for it is now generally conceded that, in addition to the readily putrescible organic matter which characterizes sewages, there is also found in effluents organic matter of the other class, that is, stable organic matter. Bodies belonging to this latter group may already exist to some extent in the raw sewage, and they are the characteristic end-products of the rapid oxidation of the sewage in a trickling filter. They are not produced appreciably in the anaërobic decompositions of the septic tank, and would, therefore, appear to be the result of the direct oxidation of the organic molecule rather than of its hydrolithic cleavage.

Water analysts feel strongly the need of distinguishing between these two classes of bodies in potable waters represented by animal pollution on the one hand and by vegetable extractive matter on the other. Many attempts have been made to devise an analytical process for this purpose. Woodman (1898) has proposed a method which is worthy of wider adoption. He would determine the oxygen consumed by the regular method from permanganate and again from chromic acid.

In sewage analysis nothing in the ordinary procedure serves to give any clew to this question of the character of the organic matter. There-

fore about 1889 Scudder devised as a simple method of studying this point the test which has since come to be known as the incubator test. Mr. Phelps' experience with the test upon many kinds of effluents leads him to believe that the observed changes in the amount of available oxygen and in the oxygen-consuming power of the effluent during incubation serve to indicate three different conditions of the effluents, rather than two only, and that the interpretation of the test from this point of view makes it the most valuable one in our analytical procedure. The following classification of the results of the test will make this view plain. 1, there is no loss of available oxygen during the incubation. 2, there is no loss of available oxygen. (*a*) The loss is only partial. The oxygen-consumed value is unchanged or diminished. The effluent remains clear without the production of disagreeable odor. (*b*) The loss is total. The oxygen-consumed value is increased. Putrefaction has occurred with the production of disagreeable odors, and usually of a dark sediment.

In case 1 the organic matter is stable, or non-putrescible, in the true sense of the word. Such an effluent would pass the incubation test in its strictest forms as recommended by Scudder. Case 2 (*a*) represents an effluent whose organic matter is not completely stable. The putrescibility of this organic matter is not determined by the test, since anaërobic conditions have not been established. Although the available oxygen is diminished and the effluent would not pass the test as used by Scudder, it is, nevertheless, apparent that it contains within itself the power to complete its own purification, and thus could not under any conditions become foul. Case 2 (*b*) is an example of an effluent which cannot complete its own purification, and would draw upon the purifying power of the stream. Its effect upon the stream, therefore, would depend upon other considerations, namely, relative volumes of the stream and of the effluent, character of the stream as regards previous pollution and available oxygen, etc. In general, effluents of this character ought not to be discharged. They constitute pollution even when no immediate nuisance is produced. Their effect upon the river is cumulative, and in the case of a stream receiving such effluents from a number of communities the first discharge might be of untreated sewage, while the communities lower down would be obliged to produce a very pure effluent in order to prevent fouling of the stream.

Turbidity, Color. In effluents showing an appreciable turbidity, the determination of the total nitrogen upon the sample after filtration through paper will give additional information. Since it may be assumed that a large part of the suspended solids will eventually find its way to the bed of the stream, this information will be of practical value to the analyst. The writer has found the determination of the putrescibility upon such a filtered sample to be also of service. In some cases a mere

settling out of the grosser matter will serve to change the character of the effluent from one slightly putrescible to one thoroughly satisfactory.

The color of clear effluents of high purity often serves as a useful indication of slight changes in the work of the filter. Where a high degree of purification is not attempted, the color of the effluent is of no value whatever.

The odor of the effluent is often of significance to the analyst, although the difficulty of correctly describing such an odor in intelligible terms lessens the value of this test as a matter of record. The odor after incubation is obviously of great value in the interpretation of that test.

Bacteria. When we consider that the removal of pathogenic organisms from the sewage is one of the prime reasons for its purification, it is unfortunate that the advance of knowledge in this particular subject has been very much slower than on the purely chemical and engineering sides. The actual removal of pathogenic organism from water by sand filtration has been experimentally demonstrated, and a study of the vital statistics of certain localities before and after purification of a polluted water supply leaves no room to doubt that a fairly complete removal of such organisms by sand filtration is possible.

The organisms supposed to be the cause of nitrification in the filters have been extensively investigated. Qualitative studies other than these are not very often made. What little information exists at present on this important subject is for the most part too meager to allow of any general conclusions as to the significance of any given organisms or groups of organisms in an effluent.

Mere quantitative counts of the organisms in the effluent are of no significance except in those effluents in which a high degree of purity is expected. In such cases the number of organisms present serves as a valuable index to the amount of organic matter in the water.

Conclusion. Summarizing briefly the most important points in the analysis of a sewage-filter effluent, it may be said that the determination of the nitrogen in all its forms is of first importance, not alone in indicating the extent of the purification, but as an index of the stability of the effluent; that the determination of the total organic carbon, or its roughly relative estimation by the oxygen-consumed test, ranks next in significance, representing material that still requires oxidation; that the dissolved oxygen is of great significance both as to the condition of the filter and the stability of the effluent; and that a study of the changes occurring during incubation serves to reinforce the analytical data, and is in reality the ultimate criterion upon which the interpretation of such data depends. The value of bacteriological data as indicative of the quality of the effluent is still an unknown quantity, although the determination of specific coefficients, as described by Clark and Gage, may eventually become the

standard against which we may check our simpler laboratory methods. Such extensive studies are obviously not available in the routine work of the analyst for sewage works, but are of the greatest importance in enabling us to understand the processes with which we are dealing and correctly to interpret our analytical data.

In his discussion of Mr. Fuller's paper on sewage purification,* Mr. John W. Alvord summarizes what " in his opinion, are safe conclusions of recent origin, and known facts which have been well demonstrated " regarding rapid sewage purification. As this summary is most excellent, it is here given bodily, though at the expense of repetition of some of the statements contained elsewhere in this chapter.

1. The nature and quality of sewage are exceedingly complex and variable, so that a special study of the local conditions is always advisable.

2. No well-designed and properly operated sewage plant should result in a nuisance to its neighborhood, but, nevertheless, respect should be shown to the sentiment of property owners in selecting a location, well removed from residence districts.

3. No form of sewage plant, in which large quantities of sludge must be handled by manual labor or mechanical methods, can be said to be necessary or satisfactory.

4. All forms of sewage purification are greatly retarded by the cold of winter, and accelerated by the heat of summer, and due allowance for this drawback must be made in designating the capacity and arrangement of such plants.

5. The function of sewage purification is at times only to avoid a nuisance, while at other times it is necessary to remove a serious menace to the public health. Such plants, therefore, must be designed so that their effluents meet the conditions of their future destination, and local conditions will be found to vary in purity requisite within very wide limits.

6. Where stream flow is available for final disposition and such streams are not used for water supplies, it is nearly always allowable to consider dilution as a final stage of purification; care being taken that the proportion of impurity allowed to enter the stream is not greater than can be successfully dealt with by the dry-weather flow without resulting nuisance.

7. Chemical and bacterial analyses in sewage purification works are

* Transactions A. S. C. E., International Engineering Congress, Vol. LIV, Part E, pp. 247–253.

quite apt to be misleading, unless taken in considerable numbers over extended periods and under all conditions.

8. The designer of a sewage plant should have the opportunity to direct its operation for at least one year after it is put into service, in order that he may train intelligently its future care-takers and see that the ideas which he incorporated into its design are thoroughly carried out in operation.

9. The theory of sewage purification is in advance of the practice, and at present not so much can be learned from experimental work, unless conducted upon a very large scale, as can be derived from studies of the numerous full-sized installations now in operation.

10. The problem of sewage purification naturally divides itself into two stages, the first of which consists in dealing with the suspended matter, and the second of purifying the clarified liquid.

11. The greatest single problem in sewage purification is to deal successfully with suspended matter.

12. While very great advances have been made in reducing this difficulty in the last few years, and while it is now within much more manageable and economical limits than ever before, the problem is not yet fully and satisfactorily solved.

13. After the elimination of all or the larger portion of the suspended matter has been successfully accomplished as a first stage, there are no inherent difficulties in properly purifying the liquid, thus clarified, with economy and efficiency.

14. Suspended matters are best dealt with without attempting mechanical or chemical separation from the liquid vehicle.

15. The screening, sedimentation, roughing filters, coarse contact beds, and septic tanks all form more or less practicable methods of dealing with suspended matter, when preliminary separation is not attempted.

16. Sufficient data do not yet exist to determine the proper arrangement, necessary regulation, and comparative economy of these different methods, and the largest portion of that which is now uncertain in sewage purification is due to this cause.

17. So far as it is possible to judge at this time, the septic tank appears to be in the lead in the matter of dealing with the solids of sewage. It would seem that comparatively little attention is being given to other methods just at this time.

Septic Tanks.

18. Under present designs and methods of operation, septic tanks do not deal with all the suspended matter in sewage, but a residue remains in the tank, which must be removed from time to time, and some passes

out of the tank in the overflow under average conditions. Evidence shows that this residue varies greatly under different conditions, but, on the average, it is very much less in amount compared with the suspended matter in the original sewage, so that large economies are effected not only in the primary stage of getting rid of the suspended matter, but also in the secondary stage of filtering the clarified liquid.

19. A desirable effluent from the septic process should be largely free from suspended matter, but not in a state of advanced decomposition. The effective mean is reached when such effluent admits of good nitrification by rapid filtration at high rates of flow without clogging the filters with suspended matter at the same time.

Coarse Contact Beds and Roughing Filters.

20. Such beds receiving raw sewage are only successfully worked with extensive mechanical screening and the prior interception of all mineral matter.

21. While such beds lose in effective capacity, the length of time of effective operation prior to renewal is still so long that the complete cleaning of the contact material, or possibly its renewal, properly falls under the head of operating expense, and with more careful study effective arrangements for cleaning may not become unduly expensive.

22. Coarse contact beds and roughing filters properly designed and well regulated will deal successfully with a large percentage of the initial suspended matter in sewage, but the results accomplished with them so far do not seem to equal the results from the septic tanks.

23. Contact beds and roughing filters require for their operation a considerable amount of fall; the same is not the case with septic tanks, and gives the latter great practical advantages.

Secondary Treatment.

24. The secondary treatment of sewage, by which is meant dealing with a clarified liquid containing impurities in solution, has been extensively studied and is well understood at this time. It presents no difficulties which are not easily and economically overcome.

25. All secondary treatments, however, become complicated when they have to deal with the indifferent removal of suspended matter in the primary stage, and this is the most frequent cause of failure in the secondary treatment of sewage.

26. In the present state of the art, it is necessary to estimate upon secondary treatments which will, at least, deal with a small proportion of the more finely divided suspended matter which escapes from the primary treatment.

27. The most available forms of secondary treatment at the present time are intermittent filtration through sand beds, fine-grained contact beds, intermittent continuous filtering and broad irrigation.

Intermittent Filtration.

28. Where porous soils exist in abundance, and land is comparatively inexpensive, intermittent filtration through sand is the most desirable process now available to accomplish the second stage of purification.

29. In intermittent filtration, rates of 250,000 to 400,000 gallons per acre per day are practicable when dealing with sewage from which the suspended matters have been largely removed.

30. The effective size of the sand grain in relation to the dose is of the utmost importance, and coarse sand in intermittent filtration effects great economies by increasing the allowable rates of flow without seriously reducing the purity of the effluent. Such increased rates of flow, of course, always decrease the necessary area of beds required and proportionately the first cost of the plant.

31. The effectiveness of intermittent filtration is seriously retarded in cold weather in northern climates, and due allowances should be made by an increased area when designing plants for such climates.

32. A well-designed and properly regulated intermittent filtration field will produce a higher degree of purity and less variation in the purity than any other method now available for the secondary stage of purification.

Contact Beds.

33. In localities where land is expensive or porous land entirely unavailable, contact beds offer an alternative to intermittent filtration for the secondary stage. Such beds require a minimum amount of land, but a maximum amount of fall.

34. The expense of the contact-bed system is such that, in localities where a good site can be obtained, it is often more desirable to construct intermittent filtration beds from material brought from a distance rather than to resort to contact beds.

35. The chief difficulties in the contact system are the necessity of having considerable fall, the expense of obtaining tight tanks of large size, and the necessity for a stable contact material.

36. Contact beds, in which the size of the material is suitable for the amount of suspended matter received in the sewage, do not ordinarily fill up or clog too fast, but renewal of the material or its cleaning at long intervals may be a reasonable operating expense.

37. A stable contact material is more desirable than one of higher bacterial efficiency, as ordinarily the bacterial efficiency of available materials does not differ seriously.

38. The effluent from contact beds, properly designed and well operated, is satisfactory for all ordinary installations.

Automatic Rotating Appliances.

39. Good and reliable automatic appliances are now on the market, by which the sewage may be mechanically rotated upon intermittent filtration beds or may fill and empty contact beds to the great advantage of the plant in economy of operation and regularity and uniformity of flow.

40. Automatic devices should not displace intelligent supervision and some labor in the form of care-taking.

Intermittent Continuous Filters.

41. Intermittent continuous filters have now been in successful operation as full-sized plants under ordinary working conditions long enough to establish their claim to careful consideration in new installations.

42. Like contact beds they need a minimum of land, but a maximum of fall. It is apparently safe to estimate upon rates of flow of 1,000,000 to 1,500,000 gallons per acre per day with ordinary domestic sewage fairly well clarified of suspended matter.

43. Like contact beds, the stability of the filter material is of more importance than its high bacterial efficiency.

44. With any considerable quantity of suspended matter carried over from the primary stages of purification, the problem of a proper and effective distribution system is a serious one, and in large installations very difficult and expensive both in first cost and economical operation.

45. The problem of clogging of the beds of intermittent filters with suspended matter is analogous to the similar problem with contact beds, but there are indications that the continuous intermittent filter, properly designed and operated, will receive suspended matter for a longer time with less reduction of voids than the contact-bed system.

46. The problem of freezing weather in the northern parts of this country, at first thought to be a serious objection, is apparently overcome by simple covering which is not unduly expensive.

There are many unsolved problems in sewage purification still remaining for consideration. We have had many ingenious theories as to the precise mode of action of bacteria in breaking down organic matter, but it is probably only safe to say at the present time that in some way unknown to us minute organisms are capable of breaking down organic

matter under certain conditions of suitable environment, which have been and are being developed from experience.

We cannot draw any sharp line between anaërobic and aërobic action. We cannot trace nitrification to any one form of bacteria with any certainty, and we do not know the precise function of facultated bacteria, or what part enzymes have in organic dissolution.

We are groping after some method of retaining suspended matter in septic tanks until it shall be wholly dissolved and at the same time not render the effluent refractory.

We want to know if a so-called anaërobic filter will accomplish this, that is to say, if a continuation of the septic tank, which could be filled with coarse material, might mechanically arrest the finer particles of suspended matter. If this is possible, at what rate is it safe to operate such a contrivance? Will it have to be cleaned? If so, how often? Shall we operate it under aërobic or anaërobic conditions?

We would like to know what other methods might be devised to complete the work of the primary stage in eliminating suspended matter. Is it best accomplished by some screening device preceding the septic tank, or a filtering device following?

We would like to know how to operate the septic tank. Shall we find some fixed time which is good enough for all classes of sewage under all temperatures, or shall we introduce methods by which the flow can be controlled and regulated?

What shall we do with the proportion of sludge retained by the septic tank, and in what way can it be best removed, and what disposal should be made of it? When is a septic tank not a septic tank, but a sedimentation tank? And what is its best form? And when should it be covered, and when is it best to leave it uncovered?

If suspended matter must be carried over from the primary stage of sewage purification to the secondary stage, how much can we profitably deal with?

How long will contact beds run with fine suspended matter coming over upon them, and what will be the cost per million gallons to keep them in condition?

How much suspended matter will intermittent continuous filters take, and for how long? And where is the balance between employing labor to keep a cheap distribution system open and a more costly device which will keep itself open?

These are some of the questions which engineers are asking themselves when engaged upon studies for new plants. We have all the theories as to what the answers ought to be, and we have answers based only on general experience; but such theories and answers are very much in need of new light.

It may be added by the present writer that the data reported regarding various works now in operation is usually far less a value than it should be, and often of no real value to the designer. This is because in case of most small installations there is usually some serious defect in the design of one or more parts of the system, or in proportioning them, and the defects are not reported in the descriptions; or because such data represent the results of special tests while the plant is new and under the supervision of its builders, while a year or so of use may improve it, or very greatly lessen its usefulness. Visiting various installations, however, is of greatest use to the designer, as it enables him to see the defects that develop after a system has been in operation for some time.

CHAPTER X

DIFFICULTIES EXPERIENCED IN SOME ACTUAL INSTALLATIONS

In May, 1904, the writer was requested to take charge of the completion of two sewage purification plants in process of construction for the United States Government, one at Fort Leavenworth, Kansas, and the other at Fort Des Moines, Iowa. The work was being done under plans prepared by the contractor, guaranteed to produce certain specified results, and it was found necessary to make many changes before the guarantees were met. As the difficulties encountered were of a character likely to be met by any engineer who attempts work of this kind, some account of them and of the means adopted to overcome them will be given.

Sewage Purification Works at Fort Des Moines, Iowa. The specifications prepared by the Quartermaster's Department, United States Army, for this work contained the following provisions:

The bidder will submit with his proposal complete drawings and specifications to cover the work, all details of construction, specials and gearing; but these specifications will govern as to the quality of material used and workmanship, which must be first class in all respects.

The system must be capable of properly purifying all the sewage wastes of a population varying from 1200 people with a maximum flow of 30,000 gallons in any four hours to 400 people with a maximum flow of 10,000 gallons in any four hours.

Surface or storm waters will not be carried by the sewers.

Efficiency. The purification required is that all solid matter shall be arrested and 80 per cent of it shall be destroyed by the works, so as not to require manual labor for subsequent removal and destruction. The effluent shall be by chemical analysis shown to contain not over .148 parts of albuminoid ammonia in 100,000 parts, and 100,000 parts shall consume less than 1.43 parts of oxygen in four hours. The effluent shall not be putrescible.

The following description is intended to cover a system of work which it is believed will accomplish the desired results. The suggested works consist of a grit or sediment chamber, a by-pass to prevent overflow of tank, a septic tank, suitably divided to provide for the variation of flow of sewage, and four aërating bacterial filters, all of which to be built of brick or concrete.

Grit or Sediment Chamber. The main sewer must be connected with the grit or sediment chamber into which it discharges. From this chamber the sewage is delivered into the septic tank by a special inlet so designed that sewage will enter without causing injurious currents. The grit or sediment chamber will be so arranged that the solid matter can be removed without drawing off the liquid.

By-Pass. A by-pass must be placed in the grit or sediment chamber so as to prevent flooding the tank, should the flow at any time exceed that for which the works are designed. It must be such that the overflow will be entirely free from solids in suspension. This by-pass to be 10 inches and to be connected into the present sewer at the most convenient point.

Septic Tank. The tank should have a capacity of 48,000 gallons, and be so divided by a brick or concrete partition dividing the tank into two unequal parts, that a portion of it can be used at times of decreased flow of sewage. It must be covered by a solid brick or concrete roof properly ventilated. One or more manholes are to be provided and placed so as to give convenient access to the tank. The effluent from the tank will pass over a submerged weir, or other approved outlet, into a channel or chamber leading to the filters.

Clean-out. A clean-out well, or other approved device, will be provided, so that the mineral matter and other insoluble residue that may accumulate in the tank can be removed without draining the tank or disturbing or destroying the mat on the surface of the liquid.

Filters. Four or more bacterial contact beds or filters, each of at least 30,000-gallon capacity, when filled with approved material, will be provided. The tank effluent will be distributed over each filter by means of automatic, alternating gear of "The Cameron Septic Tank Company's" pattern, "The Adams Automatic Sewage Feed," the "Miller Automatic Plural Alternating Siphon," or their equal. The filter effluent will be collected on the floor of the filters, and thence discharged. The discharge must be automatic and so arranged that the effluent from the tank can be retained in the filters for a period of from four to six hours. The device for this purpose will be that of "The Cameron Septic Tank Company, "The Miller Automatic Timed Siphon," or their equal.

The bottom of filters will be constructed of concrete of such thickness as will thoroughly exclude all surface or sub-surface water; the outside walls of brick-work laid in cement or of concrete and plastered on inside.

The tank effluent will be distributed over each filter by lines of terra cotta pipes of suitable size with open joints, and will be collected by agricultural drain tile laid on filter floor discharging into a six-inch collecting main, and connected with the controlling device. The outlet from there will be 10-inch terra cotta pipe leading into the nearest manhole in present sewer, as directed by the officer in charge.

No plans were furnished by the Government, and the above *description* is evidently a partial description of a "Cameron" system, modified in the clause headed *Filters*, so as to allow "Adams" and "Miller" siphons. These clauses were of suggestive value only, as no person but a specialist would be qualified to bid on this work and to guarantee its efficiency, and no such person would be guided in his design by such suggestions.

The contractor's specifications and plans called for a grit chamber, a compound septic tank, upward anaërobic filter beds, a dosing tank, three primary contact beds and three secondary contact beds of peculiar construction, and a sand filter. The capacities of the anaërobic structures were as follows:

Sediment chamber: 7 feet wide, 12 feet long, and 10 feet deep; 5000 gallons capacity.

Septic tanks: two tanks, each subdivided into two compartments. First tank, 8 feet wide, 52 feet long, and 11 feet deep; 34,000 gallons capacity. Second tank, 8 feet wide, 38 feet long and 11 feet deep; 25,000 gallons capacity.

Anaërobic filters: estimated capacity of the two filters combined, 7500 gallons.

The general arrangement of these structures is shown in plan in Fig. 37, in which *E* and *G* show the first compartments of the septic tanks, *F* and *H* the second compartments, *A* and *I* the anaërobic filters, and *J* the sediment tank. The two halves of the system were connected in multiple, and the arrangement of pipes for another connection, shown on the figure, was a later improvement.

The dosing tank was located near the filter beds, at some distance from the septic tank. It had a capacity of 10,000

gallons per dose, and contained three Miller automatic siphons, with eight-inch discharge pipes, connected so as to discharge in turn to each of the three contact beds in the first set.

The first set of contact beds was masonry lined, and each bed contained a mass of filtering material approximately 32

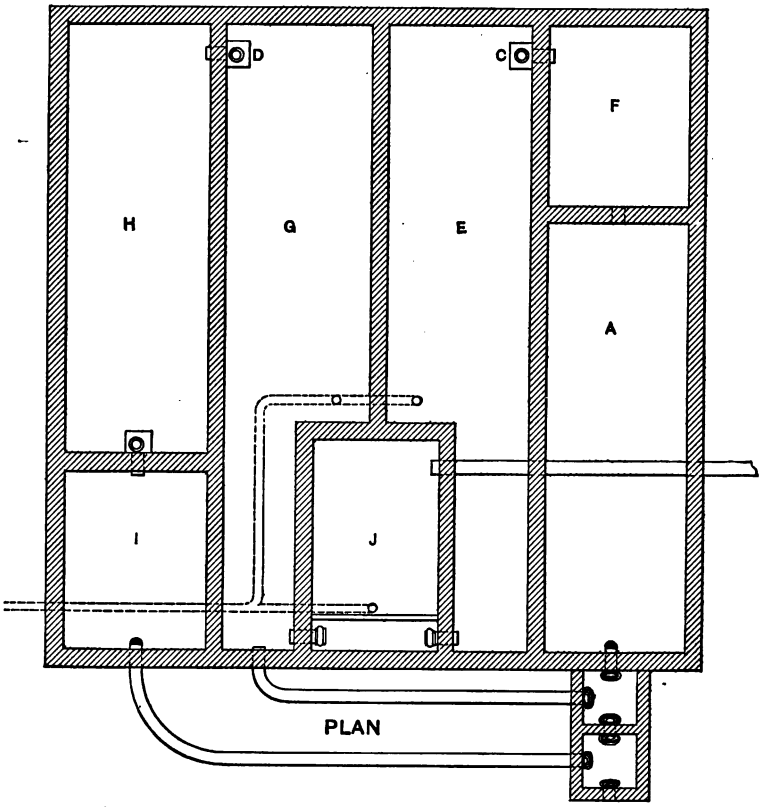

Fig. 37. Plan of septic tanks at Fort Des Moines, Iowa.

feet × 50 feet × 5 feet, — 8000 cubic feet. Allowing one third void spaces, with the bed standing half full, it would contain one dose of 10,000 gallons. These beds were discharged by Miller automatic timing siphons.

The second set of contact beds was of similar depth and capacity to the first, but was placed in excavation in the earth without masonry linings.

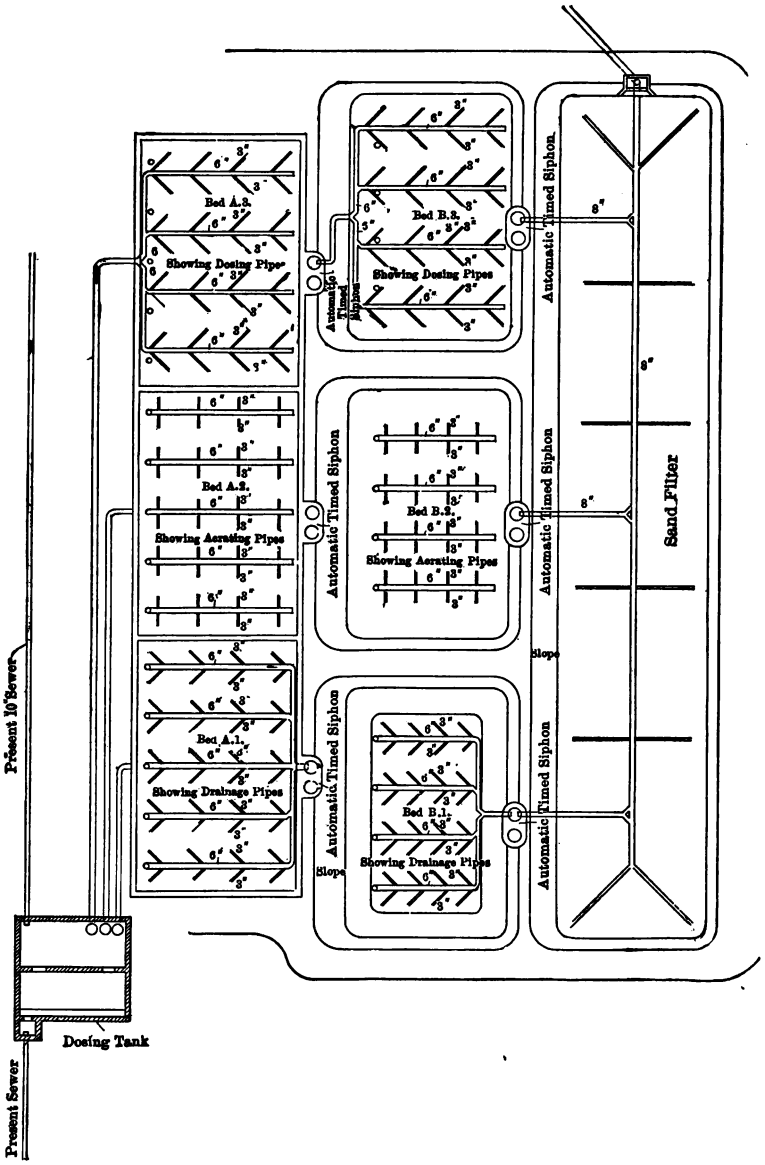

Fig. 38. Plan of filter beds at Fort Des Moines, Iowa, as first constructed.

The sand filter was to be arranged either as a "downward aërobic sand filter or an upward anaërobic sand filter, as may be found most effective and satisfactory."

The relative location of the dosing tank and the filter beds is shown in Fig. 38.

In midsummer, 1904, the writer first visited this system. The following extracts are taken from a report by him dated September 12, 1904:

"At the time of my first visit to Des Moines the banks were all in an unfinished condition; the septic tanks were leaking badly; a portion of the sand filter had been washed out; the vent pipes from the various beds were incomplete; the sediment tank was entirely clogged; and the sewage was

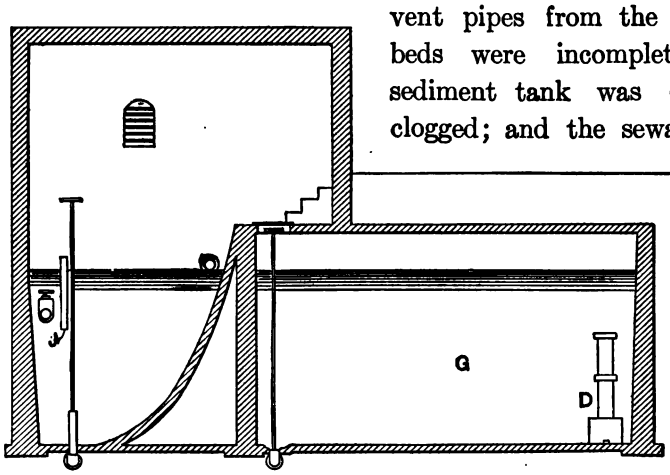

Fig. 39. Section through sediment chamber and septic tank, Fort Des Moines, Iowa.

not flowing through the system, it having been diverted in order to permit of repairs.

"The man in charge proved himself unable to stop the leaks in the various tanks, or even to locate them, under instructions that were furnished him by correspondence, and it was necessary for me to go to Des Moines and find all these leaks personally and to modify the arrangement of valves so that they could be made tight.

"The purification plant at Fort Des Moines was built according to drawings marked Sheet 1 and Sheet 4 accompanying the proposal with some modifications in detail, notably modifications to the plan of the siphon shown on Sheet 4 which is

entirely incorrect, and which misled the writer seriously in correcting the errors of construction.

"Sketch 1 attached to this report (Fig. 39) shows the manner in which the passages from tank to tank were modified by the writer in order to prevent the accumulation of sludge. These modifications consist of a scum-wall in the sediment tank and vertical pipe lines in two of the septic tanks. The scum-wall in *J* forces the sludge to the bottom of the tank *J* and up into the septic tanks through valves *V*, while the pipe lines *C* and *D* take partially clarified sewage from an elevation above the top of the sludge in *G* and *E*, and convey it to *H* and *F*. (See also Fig. 37.) These pipe lines have been placed only on one half of the system, namely, in tanks *G* and *H*, and to make the system complete, and to thoroughly prevent the clogging of the roughing beds, the same arrangement of pipes should be placed on the other half of the system. This has not yet been done, because it would necessitate the draining of the other half of the system, which could not have been done when the writer was in Des Moines without stopping work in other places. It should be done, however, as soon as possible.

"Sketch 1 (Figs. 37 and 39) also shows the location of the two pipes with valves *V*, from the sediment tank behind the scum-wall, into the septic tanks. The purpose of these pipes is to allow the free passage of the sludge into either tank at a lower level than that of the sluice boxes installed. It was found that the sluice boxes were not of sufficient capacity to permit of the use of only half of the system if that were desirable.

"Two of the septic tanks leaked very badly, and the leaks were not stopped until a portion of the concrete was removed and relaid, providing pipes for the passage of the spring water until after the concrete had set. The drain valves in the sediment tanks were also modified in such a manner that they cannot possibly leak.

"The dosing siphons in this system worked admirably, and

the size of the dose is almost exactly what was called for in the specifications; but none of the timing siphons can be made to work as intended, because water from one dose fills the filter bed to a higher elevation than was calculated by the designer. This is due partly to the drain pipes not being of sufficient size and not being placed sufficiently close together, and partly to the fact that the voids in the sand are not as great as calculated. The result is that each dose, when it reaches a certain height in the bed, operates the siphon without waiting for the timing device to operate, and the dose discharges immediately into the next bed.

"The material of which the beds are composed in Des Moines is chiefly sand, and it may prove that we will get as good results without the use of the timing siphons as we would get with their use. It is advisable, therefore, that we test the sewage at the different stages of purification and see just what results we are getting before undertaking to modify the siphons.

"The reason that it is impossible to modify the siphons by simple adjustment is that the length of the main trap in the siphons is 30 inches instead of 36 inches, as shown on the drawing on Sheet 4. It is desirable that these siphons be modified, or else that the timing devices be removed altogether, and the system operate on as short period as possible as a percolating filter, and not as a contact filter.

"The sand filter, constructed according to the plan, does not contain a sufficient quantity of pipe. In fact, the bulk of the sand in the filter is of no value whatever because of this defect. The bottom of this filter should consist of fine, clean gravel which should entirely surround the pipes, and the sand should be placed above.

"The materials in the beds were never screened so as to separate the gravel from the sand as thoroughly as should have been done in order that the results contemplated in the specifications might be obtained.

"It was necessary to raise the concrete walls surrounding the first set of beds nine inches in order to prevent the overflowing of the sewage when the doses were delivered to the beds. This wall was raised by adding two courses of brick, which was plastered with Portland cement mortar.

"The sand filter was excavated one foot too deep, and it was necessary to lower the spill-way slightly in order to obtain the proper depth of water over the sand. It was necessary also to raise the masonry of the siphon-pits a foot in one case and eighteen inches in another case in order to bring the tops of all on the same level.

"The vents were all completed by the use of vitrified pipe so as to make a pleasing appearance as well as a substantial construction, and the banks were all sodded after being graded to the proper elevation.

"On Sheet 1 there is shown a 'sludge bed' connected with the drains from the septic tanks. This is a small bed containing a quantity of broken stone upon which the sludge from the septic tank was allowed to flow when the valves were opened. It is in every respect an extremely undesirable thing, and should be abandoned, as it is a cause of offense and a source of pollution to the stream of water in the ravine. In place of this sludge bed there should be provided a portable sludge pump that could be set over any one of the manholes and used to remove the sludge from any one of the septic tanks into a closed tank from which it could be emptied into pits dug especially to receive it, or otherwise disposed of where it would not be a source of infection.

"In repairing the leaks in the bottom of the upper anaërobic filter, it was necessary to remove all the crushed stone in that filter and to replace it. When the rock was removed I discovered that the pipe was not properly laid in the bottom of this filter, and I had the pipe relaid so as to allow the free flow of the sewage into all parts of the rock. I am of the impression that the pipe has not been properly laid in the other anaërobic

filter, and that it may be necessary to remove a portion of this rock and relay a portion of the pipe whenever the pipe connections are properly made to take a partially clarified liquid from tank to tank at the proper elevations.

"The general plan of this system at Fort Des Moines is excellent, and the errors are all errors of proportion in construction. The beds are located too close together, and the sub-soil is not sufficiently impervious to water. The pipe lines were not calculated so as to obtain the proper sizes, and there was not enough pipe used in the distribution of the sewage over the beds. The vent pipes from the lowermost layer of pipe should not be connected with the vent pipes from the middle layer of pipe. The arrangement of vents would be vastly improved if it followed the idea embraced in the patent application for our 'Breathing System' of ventilation. An upward sand filter is not as good in such a place as this as a downward filter of the same size and with the same depth of water above it, for the reason that in the upward filter there is a strong tendency for the water to wash out the finer particles of sand from the material immediately surrounding the pipes, and thus very greatly reduce the amount of filtration.

"The only work that I would recommend be done on this system unless further defects develop is as follows:

"1. Make the same changes in the arrangement of pipes in the two septic tanks and the other anaërobic filter that have been made in one half of the system.

"2. Either remove the timing device from all of the siphons at the beds, or modify the siphons so as to make it possible to retain each dose a definite length of time. Which one of these two things should be done should not be determined until an examination of the sewage has been made to see whether the purification is sufficient at the present time."

At the time the report quoted above was written, the writer was in doubt as to whether the material used in the beds would

be found capable of continuing to perform the work without becoming badly clogged; but he did not consider it advisable to remove some 1800 cubic yards of material without giving it a fair trial, and the results in purification at that time, as shown by analysis, were entirely satisfactory.

On November 7 chemical tests indicated as follows: —

Oxygen absorbed in three hours at 80 deg	1.27 parts per 100,000
Albuminoid ammonia	.091 parts per 100,000

After considering the probability of these beds clogging, it was decided to take all the material out of them and re-screen and replace it the following summer, and arrangements were made with the Government to permit this. The plant then operated during the winter. By spring, however, no aëration was taking place, as the sand in the contact beds was completely clogged.

Examination proved that the rock in one anaërobic filter had become so clogged that its removal was necessary. Steps were therefore taken to improve the septic system as well as the filter beds. Extracts from instructions to the foreman in charge will indicate what was done:

" Begin by opening all valves so that all of the beds and tanks will empty as soon as possible.

" The work divides itself in two parts, which can be carried on independently at the same time, — namely, the changes to the septic system, and the changes to the filtration system.

"**Septic System.** The work on this system consists of two parts, first, the removal of the rock from the tank marked *A* on drawing (see Fig. 37), and second, the arrangement of the pipes and valves as shown on that drawing. As a part of the arrangement of the pipes, it is necessary to make the passages marked *C* like that marked D on the drawing. This will take several lengths of pipe. Care must be taken to leave a small opening at the bottom of these pipes as in the case of *D*, to allow the tanks to

empty properly when they have to be drained. To inspect *D* in order to understand exactly what is wanted at the other places, both sides of the septic system will have to be drained.

"The cleaning out of the rock from the tank *A* will be very slow and nasty work, and it should be begun at the earliest possible moment so as to get it done as soon as possible.

"When all of this work has been done the sewage may be again turned into the system, the valves being arranged so that the liquid flows through the tanks in the following order: *E*, *F*, *A*, *G*, *H*, and *I*. Great care must be taken to get the elevations of the pipes as shown on the drawing, as the proper regulation of the flow when the valves are arranged in various ways depends upon this. The pipe after leaving the last tank, *I*, must rise as shown, before it joins the line leading to the dosing tank.

"The valve in the dosing tank by which it is drained must be opened as soon as any work is undertaken, and kept open until all of the work on the filter beds is completed. There is no work required in the dosing tank itself.

"**Filter Materials.** These materials in all of the contact beds will have to be entirely removed and screened. A portion of the screenings can be re-used, but most of the sand and all of the dirt will have to be wasted. Instructions for screening will be furnished separately. Enough new material will be supplied to make up the deficiency and to restore the beds to proper level. The material is to be deposited with care in layers, and each layer compacted by ramming or otherwise before the next layer is deposited upon it.

"**Piping in the Filter Beds.** The bottom set of pipes in the concrete-lined filter beds is to be as follows: A header of 8-inch pipe made up entirely of 8 to 4-inch single branches is to be laid along the down-hill bottom edge of the bed, with all of the branches on a level with the bottom of the bed. At the center of this header there must be an 8 to 10-inch Y connecting with

the siphon chamber, or pit, as the present opening is too small. It will be necessary to cut into the concrete bottom of the bed to set this pipe properly, as it must not stand up high above the bottom of the bed, as that would prevent the bed from draining completely. If there are any bad places in the concrete in the bottom of the bed they must be repaired with good concrete.

"Into each of the branches mentioned must be laid a line of 3-inch tile running clear across the bed. This will make a line of tile about every two feet. The other end of the tile must be blocked off so as to prevent the entrance of sand into the pipe. Around this pipe, and for a depth of 8 inches above the concrete floor, must be placed a layer of the coarsest gravel obtained from the screenings, and above this 18 inches of screened material of the next coarser grade. Then come 8 inches of coarsest material in which is embedded the next layer of pipe. This pipe must be laid all on one grade, with care. The header is to be built entirely of 6 by 4-inch double square branches. The cross pipes, as before, are to be 3-inch, and of course about every two feet apart. The header is to be provided at each end with an elbow and a riser for ventilating purposes. The grade of the center of this pipe must be exactly 30 inches above the bottom of the bed.

"Above the 8 inches of coarse material comes another 18 inches of filtering material of a finer grade, and above this another coarse layer 8 inches thick containing the distributing pipes. Greatest care must be exercised in placing these layers of material, as well as in screening them, in order to get the layers as uniform as possible, both as regards thickness and fineness. It is largely because of the slovenly way in which this work of screening was done that it is necessary to rearrange the beds, but occasion is taken at the same time to put in the pipes on a better system, and to use more pipe.

"The top layer of pipe is similar in arrangement to the bottom layer, except that it is reversed in direction. Great care must

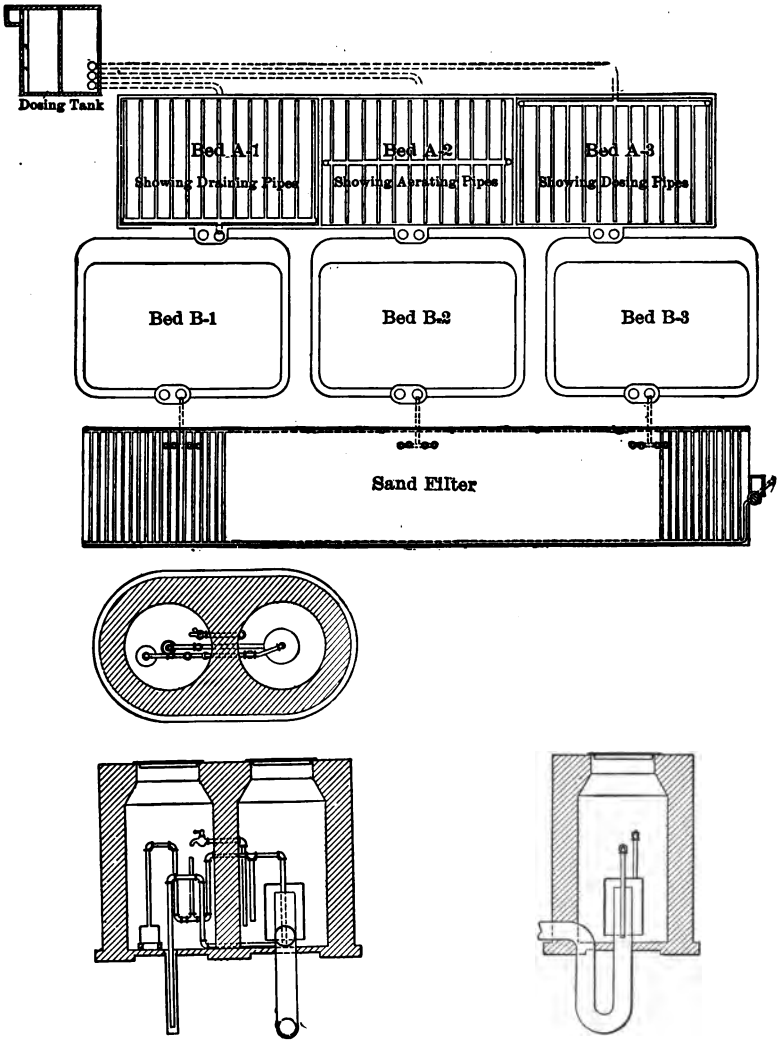

Details of siphons, beds A, B and C.

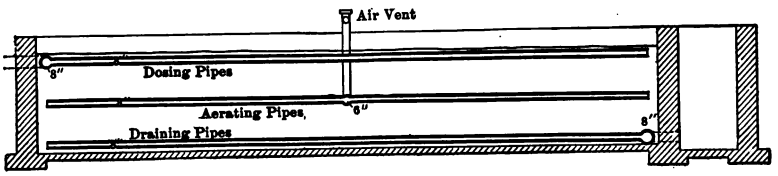

Section through bed A.

Fig. 40. Rearrangement plan of contact beds at Fort Des Moines, Iowa.

be taken to get the tops of all vents in proper line and at proper grade, so that the appearance will not be bad. There will be two vents in each filter bed if the work is done as here described.

"The second set of beds shall be treated in the same manner. The arrangement of the pipes is to be the same, care being taken to interpose a layer of sand between the bottom of the bed and the gravel in which the pipe is embedded, to prevent the running of mud into the gravel.

"The siphons will all require to be set as in the drawing furnished, and the elevations must be followed with greatest accuracy. The adjustment of these siphons has been changed in making experiments, and it will be necessary to measure all of the pipes to see that they are of proper length. One of the siphons is improperly set in the masonry, and will have to be taken out and set so that the bell can be put in the proper position."

Fig. 40 shows the pipes in the contact beds as rearranged. The beds were filled with filtering material, as indicated in the following schedule:

Figures give depth of layers of material in each bed from the top downward. The different grades of material are numbered and described as follows:

No. 1. Gravel screened by hand from the Des Moines River sand bar. Almost all of this gravel would pass through a three-quarter-inch ring.

No. 2. Fine gravel screened in running water from the sand pumped from the Des Moines River. Sizes from one-quarter-inch diameter to one-sixteenth-inch diameter, the smaller sizes predominating.

No. 3. Gravel rejected by one-half-inch round holes in contractor's power screen, screened in running water. Largest sizes about as No. 1.

No. 4. Gravel passing one-half-inch round holes in power

VIEW OF CONTACT BEDS AT FORT DES MOINES, IOWA, DURING RECONSTRUCTION.

screen and rejected by three-thirty-second-inch by three-eighth-inch oblong holes in screen, screened in running water.

No. 5. Crushed stone screened as No. 4.

No. 6. Crushed stone rejected by one-half-inch power screen."

Bed A–1.	Bed A–2.	Bed A–3.
2 ft. 6 in. . . . . No. 1	6 in. . . . . No. 1	6 in. . . . . No. 3
1 ft . . . . . No. 2	3 ft. . . . . No. 4	1 ft., 8 in. . . No. 4
1 ft. . . . . No. 4	1 ft. . . . . No. 3	2 ft., 6 in. . . No. 3
Bed B–1.	**Bed B–2.**	**Bed B–3.**
2 ft., 6 in. . . . . No. 1	4 ft., 6 in. . . No. 1	6 in. . . . . No. 1
6 in. . . . . No. 6		4 ft. . . . . No. 4
1 ft. . . . . No. 2		
6 in. . . . . No. 5		

When sewage was turned on the septic tanks the valves were arranged so as to cause it to pass in sequence through the tanks in the following order: *J*, *E*, *F*, *A*, *G*, and *H*, and through the roughing bed *I*, *A* having been converted into a septic tank by the removal of the rock. After operating for a short time the rock in tank *I* became clogged, and was taken out. Instead of causing the sewage to enter the rock from the drain pipes placed in the bottom, the writer inserted a cast-iron grating covering the entire area of the tank (8 ft. by 8 ft.), and located about 18 inches above the bottom, upon which two feet only of rock were placed. This has not as yet shown any signs of serious clogging. As now arranged all the tanks may be connected in series, or either side of the system only may be used, as desired, it being possible to drain either side while the other is in operation.

The consumption of water at this post was cut down during 1905, so that the sewage was much stronger in the autumn than in the previous year. The following analyses were made

by Mr. J. Q. Wickham, of Iowa State College, a short time after the sewage was turned upon the newly restored beds. The samples for chemical analysis were made up by taking small samples each hour, for 24 hours, the analysis being made the next day. Of course oxygen absorption tests made immediately with each sample, would have shown better results:

SEWAGE FROM FORT DES MOINES.

Chemical Analysis, December 20, 1905. Parts Per 1,000,000.

	Raw Sewage.	Dosing Tank.	Beds A 1, 2, 3.	Beds B 1, 2, 3.	Final Effluent.
Free Ammonia	19.000	11.000	4.400	2.000	1.500
Albuminoid Ammonia .	23.500	8.500	2.400	2.200	1.600
Chlorine	20.000	20.000	16.000	18.000	16.000
Nitrites	000	000	000	.060	.060
Nitrates	000	000	000	8.000	8.000
Oxygen consumed 15 min.	304.800	26.400	14.400	7.200	trace
Oxygen consumed 4 hrs.	478.800	62.000	22.700	11.900	20.300
Solids on evaporation .	1520.000	508.000	530.000	546.000	554.000
Solids at 180	1540.000	492.000	506.000	518.000	534.000
Solids on Ignition . . .	586.000	366.000	384.000	340.000	362.000

SEWAGE DISPOSAL PLANT, FORT DES MOINES, IOWA

Bacterial Analysis, Counted Dec. 21, 1905.

Date.	Time.	Raw.	Septic Tank.	Bed A—1.	Bed B—1.	Effluent.
December 18, 1905	3 p.m.	420.000	480.000	20.000	1.600	40.000
		580.000	543.000	21.000	1.700	50.000
December 18, 1905	9 p.m.	330.000	145.000	64.500	120.000	112.000
		420.000	155.000	45.000	138.000	180.000
December 19, 1905	2 a.m.	154.000	250.000	162.000	48.000	173.000
		...	660.000	137.500	192.000	150.000
December 19, 1905	9 a.m.	300.000	960.000	320.000	280.000	264.000
		300.000	1232.000	288.000	...	432.000

An examination of the plant and of these tests shows conclusively that the "upward anaërobic sand filter" is nothing more than a pool permitting some settling and much algæic growth.

No alterations were made in it for two reasons: first, that the system, both before and after the overhauling of the contact beds, achieved the specified degree of purification without the sand filter at all; and second, because the expense of making the

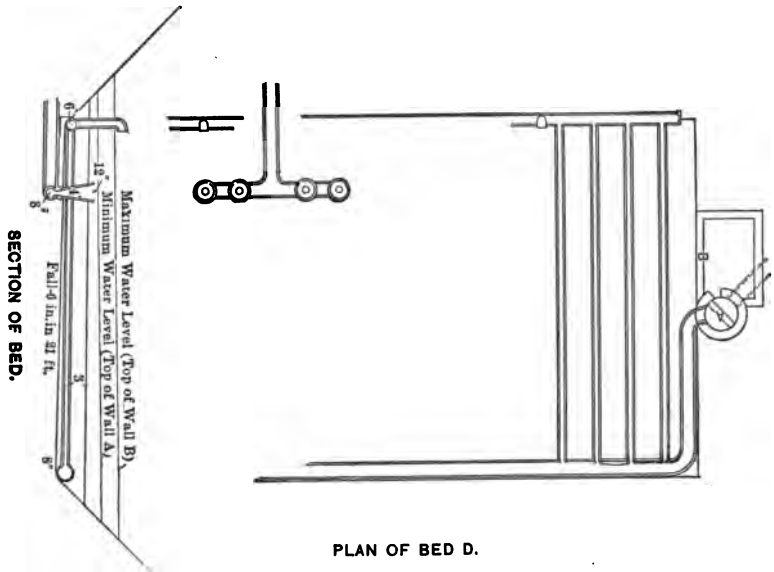

Fig. 41. Suggested rearrangement of sand filter at Fort Des Moines, Iowa.

filter more effectual would not be justified by the results. At one time, however, the writer contemplated modifying this design as shown in Fig. 41 so as to make the bed a filter in a real sense as described by the following instructions:

"**The Sand Filter.** This will have to be entirely emptied of sand and the pipe relaid. The best method is to begin at the lower end of the filter and wheel the sand from the bed to the opposite end, until about thirty feet are clear. Grade the bottom carefully as in the drawing furnished, at that end, and lay the pipe in a bed of screened gravel 8 inches deep, being as careful as in the case of the other beds to get it true to grade.

"In the case of the sand filter which is to be at all times filled

with water, it is necessary to have two headers, one for the withdrawal of the water, and the other for the escape of air and gases. This latter is only 6 inches in diameter and is provided with vents every 20 feet, commencing about 10 feet from the ends of the bed.

"The inlets from the beds above are always submerged, and the object of the design is to reduce the velocity of the water so as to allow it to flow over the surface of the bed without washing the sand of the filter.

"The discharge well is shown in the diagram. It is the intention to carry out the idea illustrated in the drawing as closely as possible without wasting any of the construction work already done. In this the elevations are very important, and they are given with reference to the top surface of the sand in the drawing. It is not material in this case if the elevation of the surface of the water is the same as it was before the changes, but it is not desired to raise the water level because of the banks.

"The overflow wall should be at the level of 'highest water level.'

"In conducting this work care must be taken to leave the grounds in the vicinity of the plant in as good condition as possible."

The writer believes that this system at Fort Des Moines is an excellent example of one of the best arrangements for such a location. It operates at present under the disadvantage of receiving little or no care except at long intervals. However, the design might be improved by the following modifications:

1. Locate the filter beds farther apart, and on a gentler slope.
2. Replace the timing siphons at the second set of contact beds by simple discharge siphons.
3. Alter the sand filter as suggested hitherto.

The patented features in this system are as follows:

1. The siphons in the dosing tank (Miller).

2. The siphons in the filter beds (Miller), both owned by the Pacific Flush Tank Company, of Chicago.

3. The arrangement for ventilating the contact beds (Venable), owned by the Sanitary Engineering Company, New York.

Sewage Purification Works at Fort Leavenworth, Kansas. The following popular description of the sewage purification plant at Fort Leavenworth was published in *The Leavenworth Times*, December 18, 1904:

The plant is now, and has for some brief time past been, in active daily operation, taking care of all the sewage, usually termed foul water, coming from Fort Leavenworth.

The plant, which cost the Government just about $47,000, is now taking care of more than one million gallons of sewage daily from Fort Leavenworth, and is pouring into the Missouri River at the present time a pure, clear liquid, almost fit to drink as it stands, where formerly the old sewerage system poured a million gallons of poisonous, disease-breeding, infected waste into the river 4400 feet above the water works' intake every day.

To one who has not been at the plant to inform himself regarding the wonders of the little institution, the statements made above will seem almost impossible; in fact, so convinced is the general public that sewage purification plants are vanities, that when Major McCarthy brought sample bottles of the final product of the plant, as discharged into the tributaries of the river, to the city, he was hailed as a good-natured deceiver. Men posted in matters of this kind looked upon the samples as one of the major's little jokes, and yet they were taken from the final discharge pipe of the plant, and there is not the least misrepresentation about them.

The constructing quartermaster explained the workings of the plant to a reporter recently, at which time a visit to every part of the system was made. Tracing the waste matter from the time it pours in from the Post sewer pipes until it is discharged may prove interesting.

The outlet of the pipe empties its mass of foul water and refuse into what is called a sediment tank inside the building. Here the solid matter sinks to the bottom, and the liquid flows out over the top of the tank into outlets bearing it to six septic tanks builded entirely of concrete and surrounding the building on the three sides. These tanks are all under ground and quite air tight and dark. Here the sewage remains for

a total of about twelve hours, being constantly worked upon by what is called the anaërobic bacteria (commonly the bacteriologic theory of darkness), and is considerably cleansed and purified before it is again ready to come to the light of day after a twelve hours' journey through the six tanks.

From the last septic tank the liquid sewage flows back into the interior of the building and into the so-called dosing tank. Here it accumulates until, when it has reached a certain height, one of two alternating siphons in the tank discharges a dose of 30,000 gallons into the first contact or filter bed to go through the semi-final purification. This filter bed is some seventy feet square and is covered on top with concrete to keep any air or foul smell from escaping. The beds are, of course, under ground. The bed itself is made up of a four feet thick layer of crushed stone, to which cling the millions and billions of bacillæ — aërobic, as they are called. The sewage is carried to every inch of the top of the bed in tile pipes, through the crevices of which the water seeps out to every portion of the surface, through four feet of crushed stone to the concrete bottom of the bed, and is here again taken up by a system of pipes similar to that on the top of the bed and carried off to the next bed below as the siphon between the two beds discharges.

Feeding the Germs. Six of these contact beds, three in a row, extend farther north from the plant itself. The alternating siphons in the plant discharge doses of 30,000 gallons every fifty minutes, first into the first bed to the right, and then to the first bed to the left. After the water has percolated to the bottom of the first vat to the right it is discharged through a second siphon into the second bed to the right, and the contact bed lies empty for twenty-eight minutes, taking in air from funnels to be seen above the sod. This air is needed by the aërobic germs. The work of allowing the beds to air out is called resting the bed. In reality it is feeding the hard-working germs fresh air to fit them for the next dose of sewage.

In the meantime, fifty minutes later, the siphon at the end of the first tank to the left has opened, allowing the sewage to flow into the second tank to the left, and it is resting for the space of twenty-eight minutes. All this is done automatically.

After the water has percolated through the second bed on the right side in the same manner as through the first, the siphon at the end of right bed No. 2 opens and the water flows into the last bed on that side to filter through the mass of stone and germs. Leaving this it flows into the final bed, known as the sand filter; and after seeping through this last sieve is discharged into One Mile Creek as clear as spring water. The three contact or filter beds to the right are independent of the three to the left so far as any interchange of water goes, yet they work in per-

fect unison, so that there need never be any stop to the eternal flow of sewage. In this way, when the water begins to leave bed No. 1 on the right, the alternating siphon begins pouring fresh water into bed No. 1 on the left, and by the time the water reaches bed No. 2 on the left, bed No. 2 on the right is already discharging its burden into bed No. 3 and preparing for the rest of twenty-eight minutes.

The whole plant is a marvel of scientific and mechanical skill.

In going over the plant Major McCarthy called the attention of the reporter to the fact that there was not the slightest suggestion of any foul odor in any portion of the plant. Even in the sediment tank, where the fresh foul-water sewage comes in, powerful ventilators carry off the stench perfectly through the tall chimney and out of the zone where it could cause any inconvenience.

There is a garbage crematory connected with this installation; and the entire plant, including crematory, was built at a loss at a contract price of $47,000, — $4.70 per capita on the basis of 4000 persons at the post.

The present writer's connection with this work began the preceding summer. The difficulties encountered can best be presented by giving extracts from reports made from time to time. The following are taken from a report dated September 9, 1904. The sewage purification plant was operated in connection with a garbage crematory, and references in the report applicable to the crematory only have been omitted here.

"I arrived in Leavenworth about the 18th of May, and inspected the plant immediately after. There were a great many things which apparently required attention upon first inspection, and among them were the following:

"The sewage had been turned into the purification plant, and leaks in some of the pipes had developed, the outflow of which passed under the crematory building and came up through the floor, and found an outlet to the ravine immediately west of the crematory. These leaks have been very serious, and were accompanied by considerable damage to the walls and floors of the sediment and the dosing tanks. An attempt had been made to stop these leaks before my arrival,

and it was reported to me by the man who was acting as time-keeper that the leaks in the pipes had actually been stopped.

"The sludge pan and the screen had not been provided, and no drawing showing the contemplated arrangement was available.

"A sludge pump and its connections had not been installed.

"The drains emptying the various tanks in cases of emergency were clogged.

"Two of the filter beds were unfinished, and the crushed stone, sand and pipe required to finish them according to the plan had not been ordered.

"The filter beds had become overgrown with weeds.

"There were other matters that came to my attention soon after I began work upon the system, which will be referred to in their proper places.

"The first work undertaken was to discover the exact location of the leaks through which the water escaped from the septic tanks. These leaks were in the pipes leading from the roughing beds to the trough behind the dosing tank.

"I was informed that these pipes had all been taken up and relaid in concrete, but I insisted upon having one taken up for my own inspection, and found that only the upper joints had been relaid in concrete, and that the joints where the elbows approaching the walls of the roughing beds all leaked, and that many of the elbows were broken. These pipes should originally have been embedded in concrete not less than six inches thick underneath the bottom of the elbows and extending from the walls of the roughing beds to the bottom of the channels. I had them all moved and relaid in concrete. To do this it was necessary to remove a large portion of the crushed stone from the passage. Such of this stone as came from under the dosing tank was replaced, and the balance was removed.

"In the original design the bottom of the dosing tank was placed on a level with the bottom of the passage as built and

shown on the original drawing, but owing to a change in the location of the building, which I was informed was made by the engineer in charge during the absence of your representative, the elevation of the foundation was lowered so that it was necessary to raise the bottom of the dosing tank to the height shown in the drawing attached in order that its contents might be entirely delivered to the contact beds. The change in the location of the building also moved the first set of filter beds down the hill, and, while not changing their elevations, shortened the purification system and made it impracticable to locate the sand filter upon a firmer soil than that upon which it is built, to which matter I will refer later. The sand filter is built in practically the same position as that shown on the original sketch, from which it will be apparent that the lower end of the filter is on filled ground.

"The raising of the bottom of the dosing tank without increasing the area of the tank reduced the size of the dose that could be taken from the tank, and made it necessary for a portion of the dose to be drawn from the septic tanks. This was your engineer's intention at the time the change was made, but, as I discovered later, he had not provided for the carrying out of his intention by properly locating the pipes through which the sewage passes from the septic tanks to the dosing tank, and I was later obliged to make extensive changes in order that this result might be accomplished.

"Besides the leaks in the pipes there were leaks in the concrete under the rock below the bottom of the dosing tank. The floor just referred to would have been the bottom of the dosing tank had not the elevation of the building been changed, and it would have been accessible for repairs had it been so constructed. There was no necessity for placing the crushed stone upon this floor, and building a floor at a higher elevation, as the siphons could have been built at the proper elevation and the water allowed to remain in the bottom of the dosing tank, where it

could not be removed by the siphons; in which case a drain should have been provided from the dosing tank to the ravine to completely drain the tank in cases of emergency. Had this been done, there would have been a saving on the cost of the crushed stone and of the new bottom in the dosing tank, which amounted to a great deal of money, and also a saving in labor and materials required to overcome the effect of the leaks. This additional floor or rock cost perhaps from $1000 to $1200 directly or indirectly, for which we get no return. In order to stop the leaks in this hidden floor, it was necessary to make the trough water-tight from the bottom of the dosing tank as actually constructed to the original lower floor.

"I then drained all of the septic tanks, and had them thoroughly washed out by the use of a fire hose, which was kindly lent by the Post Quartermaster for the purpose. This hose was connected to a plug 750 feet from the crematory building. As soon as the septic tanks were cleaned enough to enter, I made a thorough inspection of all of them. The walls and the floors were in good condition, but the forms had not been removed from the roofs, so that the roofs could not be inspected. The removal of these forms was made exceedingly unpleasant by the fact that the sewage had been turned into the system while the forms were still in place, in order that your representative might show the system to some visitors from Kansas City. These forms ought to have been removed before any liquid was turned into the tanks. After they were removed I carefully inspected all of the roofs, and decided that a small amount of repair work would be required to make them thoroughly safe. The principal item of this repair work was not completed until some time later, it consisting of plastering until it was water-tight a crevice between the roof of the tanks and the top of the walls on the southern side of the lowermost tank. We have experienced no difficulty with leaks from the septic tanks, and I believe that the walls and foundations are

of the very best quality, and that no difficulty will ever be experienced with them.

"Inside of the building, however, I considered it advisable to plaster with a thin coat of Portland cement mortar the entire roof over the dosing tank and the troughs. This work was undertaken as soon as the repairs to the leaks just referred to had been completed.

"Before turning the sewage into the system I made a careful examination of the dosing siphons and found that they leaked considerably, and it was necessary to remove a large part of these siphons and relay the clay pipes of which they are constructed with thoroughly tight joints, and embed the joints in Portland cement concrete. This was a difficult job, and it took considerable time. After this had been done the floor of the dosing tank was carefully examined, and several small leaks were thoroughly repaired.

"The sediment tank had been drained before this work was undertaken, and a heavy rain occurring, it was discovered that water came up through the bottom of the sediment tank through some small cracks that communicated with the earth underneath the lower foundation. These cracks were repaired.

"The vent opening into the inner chimney from the sediment room was reduced from 30 inches in diameter shown on the plan to 15 inches in diameter as actually constructed. I originally installed this 30 inches in diameter, but found that so much air passed through the opening into the inner chimney that the draft of the crematory was considerably impaired, and upon making a calculation (roughly) of the quantity of air passing was convinced that it took far more than was required to thoroughly aërate the first set of contact beds and to carry off the gases from the septic tanks. I therefore bushed this hole with a 15-inch clay pipe, and found that a current of air passed through this pipe when the crematory is in operation at a velo-

city of from 10 to 15 feet per second, which is ample for the purpose of ventilating the beds.

"From the start I disapproved of the sludge screen because I considered it unnecessary, but there was nothing to do under the contract but to install a screen as specified, and this was done. The water motor was found to be of sufficient capacity, and was connected up and the screen operated. It was found that there is not sufficient material to be removed by this screen to justify its operation, and as any screen of this kind would be a source of expense both for its maintenance and for its operation, I very earnestly recommend that the screen be removed entirely, and that in its place there be provided a skimming ladle and a scoop, the one to remove from the surface of the sediment tank any material such as sticks, corks, and the like that would not readily dissolve in the septic tanks and that would float upon the surface, and the other to remove any grit and heavy fragments that may sink to the bottom of the sediment tank. There is a very small amount of such material to be removed, and the man could remove it by hand in half an hour each morning.

"The sludge pump as shown on the design accompanying the bid was to be connected to the bottom of the sediment tank, and it is now so connected; but there is very little sludge that accumulates in this place, and the sediment tank and its adjuncts are now so arranged that any sludge that would accumulate in the sediment tank will either rise to the surface and be easily skimmed over the scum-wall into the septic tanks, or it will pass under the scum-wall into the septic tanks without skimming.

"The system is designed to remove at least 80 per cent of the solid material in the septic tanks, and there actually disappears a larger percentage; but that which it does not remove will accumulate in the septic tanks and not in the sediment tanks, and it will be necessary to remove portions of it from the septic tanks from time to time. In order to do this I recommend that

not only the screen be done away with, but that the present connection of the sludge pump to the sediment tank be removed, and that connections be made from the sludge pump to each one of the four septic tanks. This will make it possible to remove the sludge from any tank at any time by pumping it direct into the sludge pan where it will be evaporated to dryness, but it will cause no offense in its removal and will not require the opening of any manholes. There would be, of course, a certain amount of expense attached to this change, but the advantages would be very considerable.

"I have said in another connection that it was necessary, on account of the change in the elevation of the building, to draw upon the septic tanks for a portion of the dose. A careful study of the arrangement of the passages through which the sewage flows into the septic tanks and out of them convinced me, first, that without modifying these passages a dose could not be drawn from the septic tanks; and second, with the passages as arranged, the complete control of the sewage could not be obtained, as the sewage would flow through the short sluice-boxes much more rapidly than through the large. Experiment showed that the latter was the fact, and that, when water was permitted to flow through the system with all the sluices open, it actually passed only through the two septic tanks with short sluices, only a very small portion passing through the large tanks, so that the septic action was only about one third of that estimated in the design. To obviate this difficulty and to make it possible to completely control the flow of the sewage, and also for the purpose of making the fermentation of the sewage take place in regular stages, I changed the passages so as to arrange the tanks two in series and two in multiple, with the ability to by-pass any tank or shut it off. This raises the elevation of the sewage in some of the septic tanks, and lowers it slightly in others, but it enables us to control the process of fermentation absolutely and to very greatly increase the actual

capacity of the tanks, because of the regularity with which the fermentation takes place. It also enables us to take samples of the sewage at the various stages, which we can analyze and use the information so obtained in making any further improvements and in designing other systems.

"One difficulty has been experienced, and that is the clogging of the roughing beds. It is possible that further changes may be required in the roughing beds, but it may be probable that this clogging has gone as far as it will ever go, and that it will not be a serious source of trouble. The clogging was largely caused by the fact that the pipes leading from the septic tanks to the roughing beds originally approached to within three or four inches of the bottom of the septic tanks, and in that location carried over sludge into the roughing beds while they should have carried over only a partially clarified effluent. This defect has been remedied by the cutting off of these pipes to a proper length. The new arrangement of sluices makes possible the absolute control of the flow of the sewage so that any portion of the system may be used while another portion is cut out of service. This work occupied considerable time, as the defects in the elevations were not anticipated.

"After the various defects at the septic tanks had been remedied, the sewage was turned in and the work of adjusting the siphons undertaken. These siphons were originally purchased from the Pacific Flush Tank Company according to the plans agreed upon, but your former representative had purchased siphons made with plain cast-iron piping, and he had specified galvanized iron piping in the contract with the Government. Galvanized iron pipes were made for all these siphons by the local plumber, who took one of Miller's siphons and cut the pipes for all of them to correspond. In assembling his pipes he did not get all the siphons put together in exactly the same manner that they had been put together by the original maker, and besides this he did not get all of the joints perfectly tight. As a result, some

work had to be done in tightening the joints before any test of the siphons could be made; but this would have been a trifling matter had the siphons as furnished by the Flush Tank Company been what were required for the actual system as installed, and had they been set at the proper elevations.

"The arrangement of the siphons and the design of the siphons in a system of this kind are of much importance in the engineering work, and must be most carefully considered. I am of the impression that the siphon builder was furnished with certain data regarding the levels of the water to be expected in the filters beds, and that he designed the siphons correctly according to that data, but that the data originally furnished him were not correct, and also that the siphons were not set by your instrument man at elevations corresponding to those furnished the maker. There were thus two errors. The first error arose from the incorrect calculation of the water levels in the various contact beds, the percentage of the voids being taken at too high a figure and the leakage ignored. The first bed, which is a covered bed, holds less than it was expected to hold, while the second bed holds more than the first, and the third bed holds more than the second. Thus, if the siphons had been set at the elevation indicated by water levels furnished their maker, the depth of water in each siphon pit would have been less than that for which he designed by at least a foot in the second bed, and by perhaps 18 inches in the third bed, when the dose was adjusted so as to entirely fill the first bed. But the siphons were not set at such elevations, the first set of siphons being approximately correct, the second set being placed six inches too low, and the third set being placed thirteen inches too low, so that it was impossible for the second set or the third set to take air under the bells at the proper time; and the sewage, instead of being retained in each bed for a certain length of time, flowed through the siphons continuously. Before differences in the capacity of the beds could be detected, it

was necessary for me to set the siphons at the proper elevations, to correct the mistakes made by the plumber, and to make all the joints perfectly tight. I then discovered that it was necessary to make very complete changes in piping. In making these changes I did considerable work upon the siphons; and as there was no means of draining the siphon pits except by the operation of the siphons, I was obliged first to place drain valves in all of the filter beds in order to be able to work in them. Finally I got all the siphons working. The following is the manner in which they work at the present time:

"A dose delivered to the first bed is held in contact some time and then discharged to the second bed, where it remains in contact until a second dose arrives at the second bed, when the two doses pass on together to the third bed, and immediately pass from the third bed to the sand filter without the use of the timing device in either the second bed or the third bed. This method gives considerable purification, and we will shortly know if the purification is sufficient; but it is not the system that was originally intended, and it is not practicable to make the siphons operate according to the system originally intended without considerable modification either to the siphons or to the beds.

"It is a fact that the quantity of sewage flowing through the system is considerably in excess of that upon which bids were asked and according to which the contract was drawn. This is a very serious matter.

"There were many minor matters that needed attention, such as the painting, the opening of the drains, the grading of the ground so as to protect the beds against rain water, the cutting down of trees at the lower end of the sand filter, the repairing of leaks, the repairing of the roof and the down-spout for rain water, the painting of the iron work, and removal of certain lettering from the manhole covers, all of which has been practically completed. In connection with the purification plant it is necessary to state that the sand filter, being built partially on

filled ground and in a loamy soil upon a steep bank above the creek, has been a source of great anxiety and considerable expense. I did not know until I examined this filter with water in it that the foundation was insecure, but immediately after the sewage was turned into the system I discovered that the banks were sliding, and in order to stop this I immediately employed a team with a scraper which has been continually at work for more than a month reinforcing these banks and relining parts of them with clay. The team also scraped channels for the rain water so as to divert it from the dangerous banks. Besides this I have built a wall of riprap five feet high and fifty feet long at a point in the creek where the bank is exposed to washing. I have modified the outflow from the sand filter by inclosing it in a 12-inch pipe and conveying it to a point entirely below the bank, and I have also cut down all of the trees near the top of the bank where the filter is located. The bank between the last set of contact beds and the sand filter also gives me some anxiety. This bed is located entirely too close to the filter, just as the filter is located too close to the creek. There has been considerable washing of the bank on the west side into another creek by a deep cut that has been scraped through the ridge. There is still some scraping to be done to make these banks secure, and they will continue to be a source of anxiety until the system has successfully passed through the severity of winter. It is necessary to move a great deal of earth in order to prevent the sliding that has commenced."

The following letter indicates continuation of work on this system, and its completion. At its completion the quantity of sewage was found to be about 1,185,728 gallons per day, in approximately uniform flow, there being a dose of 37,054 gallons discharged about every 45 minutes, or thirty-two such doses per day. This, in an alternating system, made a dose into each bed once every hour and one half, the volume being several times that calculated upon.

The CONSTRUCTING QUARTERMASTER,
Fort Leavenworth, Kansas.

SIR: I have finished all the adjusting, repairing and modifying to the sewage purification plant at Fort Leavenworth, and find everything has been completed in accordance with the original contract, subject to such modifications and improvements as you are aware of, and as have been approved. For your convenience I here give a list of the more important changes and improvements, the details of which have been discussed elsewhere.

The screen has been removed and the sludge pump connected by suitable pipes to each of the four septic tanks, instead of only to the sediment tank.

The septic tanks have been arranged with pipe connections and diaphragms so as to completely govern the flow of sewage through them in proportion to their capacities.

Contact beds *E* and *F* have been improved by removing the sand contained in them and replacing it with broken stone at a proper elevation.

The sand filter has been converted from an "upward" to a "downward" filter.

The "roughing beds" have been transformed into additional septic tanks.

These changes and improvements are all very beneficial to the system. While they have been in progress, however, the sewage has for long periods passed through the system, with adequate purification; and the filter beds have become thoroughly active with bacteria. During these periods you have made frequent examinations of the effluent, and found it colorless, odorless and non-putrescible.

ANALYSIS OF EFFLUENT FROM SEWAGE PURIFICATION PLANT AT FORT LEAVENWORTH, KANSAS.

EXTRACTS FROM SPECIFICATIONS.

"The main system must be capable of properly purifying all sewage wastes of a population varying from 2500, with a maximum flow of 60,000 gallons, to 5000 people and a maximum flow of 125,000 gallons in any four hours, and the sub-system for a population of about 100 people with a maximum flow of 2500 gallons in any four hours."

"EFFICIENCY. The purification of the sewage by the system and plant to be installed must be such that the effluent may be discharged into the Missouri River without injury thereto for potable purposes."

"The effluent from the system must be clear, colorless, odorless and non-putrescible. It must contain not more than ten per cent of the

original organic matter and must be practically free from typhoid or other forms of pathogenic germs."

"The contractor will provide for the services of a competent expert, who shall be acceptable as such to the officer in charge, and who shall make three chemical and bacterial analyses of the effluents from the several stages of the process at intervals of one month during this period of operation, copies of such analyses being furnished to the officer in charge."

In notes submitted to the Constructing Quartermaster by Captain Wm. Mayo Venable, it is shown by actual measurements that the sewage handled by the system on December 4 and December 5, 1904, amounted to thirty-two doses of 37,054 gallons in each twenty-four hours, or about 1,185,728 gallons per day. Measurements taken by the Post Quartermaster during the entire month of February, 1905, night and day, show substantially the same average flow per day.

WAR DEPARTMENT,
OFFICE OF THE QUARTERMASTER-GENERAL.

WASHINGTON, December 20, 1904.

MAJOR D. E. MCCARTHY, Constructing Quartermaster,
Fort Leavenworth, Kansas.

SIR: Referring to letter of The Municipal Engineering Company, dated November 9, 1904, and your endorsement, dated December 13, 1904, you are hereby informed that but one chemical and bacterial analysis of the outflow of the sewage purification plant will be recognized as sufficient by this office, provided same is found to be satisfactory and in accordance with the weekly tests made by the Post Surgeon. The object of the provision in the specifications is to have a disinterested party make the chemical analysis, as much for the protection of the contractor as it is for the protection of the Government. However, the Government must receive its protection by the analysis by the Post Surgeon. The result as found by the Post Surgeon will be recognized as sufficient by the Surgeon-General's office, according to information received therefrom. Your acceptance of Dr. L. C. Hoffman, of Des Moines, Iowa, as a competent expert, is approved by this office.

Respectfully,

(Signed) C. F. HUMPHREY,
Qr. Mr. General, U. S. A.

WAR DEPARTMENT,

OFFICE OF THE SURGEON-GENERAL.

Chemical Laboratory,
WASHINGTON, D. C., January 12, 1905.

To the SURGEON-GENERAL, United States Army,
Washington, D. C.

SIR: I have the honor to report that I have completed the examination of the two samples of effluent from the two sewage disposal plants at Fort Leavenworth, Kan., and sent to this office for that purpose by Lieut. Col. and Dep. Surg. Gen. John V. R. Hoff, U. S. Army, and beg to report the result as follows:

ANALYSIS STATED IN PARTS PER MILLION.

	Chlorine.	Nitrogen as nitrates.	Nitrogen as nitrites.	Free and saline ammonia.	Albuminoid ammonia.	Oxygen used in moist combustion.	Total solids.
No. 1.	35.00	4.1665	0.1110	2.7000	0.5525	4.9550	480.00
No. 2.	35.00	1.2500	0.0165	0.5850	0.4250	4.4545	472.00

ANALYSIS STATED IN TERMS OF "GRAINS PER GALLON."

	Chlorine.	Nitrogen as nitrates.	Nitrogen as nitrites.	Free and saline ammonia.	Albuminoid ammonia.	Oxygen used in moist combustion.	Total solids.
No. 1.	2.45	0.2917	0.0078	0.1890	0.0387	0.3483	33.60
No. 2.	2.45	0.0875	0.0012	0.0410	0.0298	0.3148	33.04

Sample No. 1 was clear, colorless, and contained no appreciable sediment and no perceptible odor. Sample No. 2 was also clear and colorless, possessed a faint sewage-like odor and very meager sediment. Inasmuch as the data respecting the organic matter in the original sewage are not furnished, I am unable to report whether the above figures are more or less than ten per cent of the original. As to whether this effluent will be without injury to the waters of the Missouri River for potable purposes depends at any moment on the relative volumes of the effluent, the distance of the intake of the water system from the effluent discharge, and the power of the river water, by reason of its large or small amount of dissolved oxygen to oxidize this residual organic matter in a short lapse of time. Broadly speaking, no serious pollution is likely to occur if this stream into which the discharge takes place always has a fair surplus of dissolved oxygen. This may be roughly tested by mixing the

effluent with an equal volume of river water and incubating the mixture for two days, during which time no putrefaction should occur.

Several Boards and Joint Committees in Great Britain investigating river pollution have fixed upon the following essentials in their standard adopted:

Albuminoid Ammonia, less than *one part per million*, indicates "good" effluent in the absence of other easily observed objections, as foul smell, excessive turbidity, etc. This is equivalent to 0.07 grains per gallon. The dividing line between "good" and "bad" is taken as 1.6 parts per million, or 0.112 grains per gallon.

The amount of oxygen required in moist combustion must be not more than 1.0 grain per gallon, an equivalent of 14.00 per million.

Very respectfully,

(Signed) EDWIN HODGE, Chemist in Charge.

FORT LEAVENWORTH, Kansas, January 12, 1905.

To the CONSTRUCTING QUARTERMASTER,
Fort Leavenworth, Kansas.

SIR: Referring to your letter of the 9th instant, I have the honor to inform you that the examination made here of the water at the outfall of the sewer plant shows:

Bacteria	2740 per c.c.
December 28, 1904, Oxygen absorption test (100,000)	1.856
January 4, 1905, " " " "	1.7134

Very respectfully,

(Signed) J. VAN R. HOFF,
Lt.-Col. Dep. Surg. General U. S. A., Surgeon.

OFFICE OF CONSTRUCTING QUARTERMASTER.

FORT LEAVENWORTH, Kansas, January 25, 1905.

THE MUNICIPAL ENGINEERING COMPANY, New York City.

GENTLEMEN: Referring to your communication dated the 17th instant, you are informed that the tests made at the surgeon's office, Fort Leavenworth, Kansas, was the four (4) hour test. The temperature maintained was 80 degrees F.

The surgeon states also that these examinations show a decrease in the amount of oxygen absorbed, viz.:

January 11, 1905	. . . . .	0.714 parts per 100,000
" 18, 1905	. . . . .	0.582 " " 100,000

These tests were made under the conditions stated above.

Very respectfully,

(Signed) D. E. McCarthy, Major and Quartermaster, U. S. A.,
Constructing Quartermaster.

Fort Leavenworth, Kansas, February 2, 1905.

To the Surgeon, Fort Leavenworth, Kansas.

Sir: I have the honor to submit the following report of analysis of sewage and effluent from the sewage purification plant at this Post:

Analysis Stated in Parts per 100,000.

MAIN PLANT, No. 1.

Raw Sewage:	
Free and saline ammonia	1.23
Albuminoid ammonia	.37
Oxygen absorbed in 4 hours at 80 degrees F.	1.81
Effluent:	
Free and saline ammonia	.32
Albuminoid ammonia	.062
Oxygen absorbed in 4 hours at 80 degrees F.	.523
Oxygen absorbed in 3 minutes before incubation . . .	.14
Oxygen absorbed in 3 minutes after incubation for 5 days at 80 degrees F.	.135

AUXILIARY PLANT, No. 2.

Sewage:	
Free and saline ammonia	1.16
Albuminoid ammonia	.24
Oxygen absorbed in 4 hours at 80 degrees F.	1.54
Effluent:	
Free and saline ammonia	.39
Albuminoid ammonia	.058
Oxygen absorbed in 4 hours at 80 degrees F.	.48
" " " 3 minutes before incubation . . .	.12
" " " 3 " after "	.113

Dissolved oxygen in river water 6.7 c.c. per liter . . .	.96
Dissolved oxygen in mixture of equal parts of river water and effluent No. 1 after incubation of 2 days at 37 degrees C.	.871
Dissolved oxygen in mixture of equal parts of river water and effluent No. 2 after incubation for 2 days at 37 degrees C.	.162

. . . . . .

From the above data it will be seen that the effluents from both plants compare favorably with the standards adopted by various Boards, viz.

	Albuminoid Ammonia.	Oxygen Absorbed.
Derbyshire County Council	0.1	1.0
Ribble Board	0.1	2.0
Mersey & Irwill	0.14	1.4
Plant No. 1	0.062	0.523
Plant No. 2	0.058	0.48

. . . . . .

Very respectfully submitted.

(Signed) J. T. Edwards, 1st Lieut. Asst. Surg. U. S. A.,
In charge of Laboratory.

Pathologic and Bacteriologic Laboratory.

Chas. H. Hoffman, M.D., Ph.D.
Des Moines, Iowa, December 24, 1904.

The Municipal Engineering Company, New York City.

Gentlemen: I have the pleasure to herewith submit to you a report of the chemic and bacteriologic examination of sewage from the plant at Fort Leavenworth, delivered to me by you for examination.

Chemical Examination:

Sample Labeled Sewage —

Oxygen consumed in 3 hours at 37° C. grams per liter .	.01205
Nitrogen as albuminoid ammonia	13.167

Sample Labeled Dosing Tank —

Oxygen consumed in 3 hours at 37° C.	.01205
Nitrogen as albuminoid ammonia	6.333

SAMPLE LABELED EFFLUENT —

Oxygen consumed in 3 hours at 37° C.	.00328
Nitrogen as albuminoid ammonia	1.805

Bacteriological Examination:

NUMBER OF BACTERIA —

Sewage	17150 per c.c.
Dosing Tank	7175 " "
Effluent	275 " "

All of which is respectfully submitted.

(Signed) C. H. HOFFMAN.

PATHOLOGIC AND BACTERIOLOGIC LABORATORY.

Chas. H. Hoffman, M.D., Ph.D.

DES MOINES, Iowa, January 9, 1905.

THE MUNICIPAL ENGINEERING COMPANY, New York City.

GENTLEMEN: I beg leave herewith to submit a report of an analysis of a sample of sewage forwarded to me from Fort Leavenworth, and labeled —

Effluent from Sub-system:

The number of bacteria were 6442 per c.c. at temperature of 37° C.

Chemical Examination:

The amount of oxygen consumed in 3 hours was 2.122 parts per 1,000,000.

The amount of albuminoid ammonia was 1.434 parts per 1,000,000.

Very truly yours,

(Signed) C. H. HOFFMAN.

WAR DEPARTMENT,

OFFICE OF THE SURGEON-GENERAL, ARMY MEDICAL MUSEUM AND LIBRARY.

WASHINGTON, D. C., January 14, 1905.

Appendix B.

Report of bacterial examination of effluents from sewage disposal plant at Fort Leavenworth, Kansas.

Effluent from Sewage Disposal Plant No. 1.

Numerical count . . . . . 3727 bacteria per c.c.

All of the ten glucose bouillon fermentation tubes receiving one c.c. of this water contained gas on the second day, the amount present varying from 5 to 35 per cent. Judging from the proportion of gas (5-15%) present in three of the tubes they contained B. proteus. The others appeared to contain B. coli, and this organism was isolated from three that were examined for that purpose.

Effluent from Sewage Disposal Plant No. 2.

Numerical count . . . . . 8152 bacteria per c.c.

Of the ten fermentation tubes charged with one c.c. of this water, all contained gas on the third day, the amount ranging from 5 to 30 per cent. In seven (70%) of these tubes the amount of gas present was indicative of the presence of B. proteus; in only three did it indicate B. coli, and this organism was obtained from them by plating.

. . . . . .

(Signed) JAMES CARROLL,
1st Lieut. Asst. Surgeon, U. S. A.,
Curator, Army Medical Museum.

FORT LEAVENWORTH, Kansas, February 2, 1905.

To the SURGEON, Fort Leavenworth, Kansas.

SIR:

. . . . . .

Estimation of Bacteria:

No. per c.c. in sewage entering	No. 1 plant	23,720
" " " " " "	No. 2 "	36,890
" " " " effluent from	No. 1 "	4,628
" " " " " "	No. 2 "	9,875

. . . . . .

Very respectfully submitted.

(Signed) J. T. EDWARDS,
1st Lieut. Asst. Surg., U. S. A.,
in charge of Laboratory.

NEW YORK, December 26, 1904.

MAJOR D. E. MCCARTHY, Constructing Quartermaster,
Fort Leavenworth, Kansas.

DEAR SIR: I enclose herewith a report of Dr. C. H. Hoffman upon the analysis of the sewage and effluent at Fort Leavenworth. The samples examined by Dr. Hoffman were taken by Dr. Edwards and myself. Dr. Edwards took samples at the same time to send to Washington and to examine himself. Of the three sets of analyses, especially of the bacterial counts, I would regard those of Dr. Edwards as of most value, as his samples did not have to stand long or to be subjected to great changes of temperature in transportation. The samples examined by Dr. Hoffman were carefully packed and were delivered to him in Des Moines at ten o'clock the day after they were taken.

The record of the oxygen absorption tests was given by Dr. Hoffman in grams per liter. These may be reduced to parts per 100,000 by multiplying the values given by 100. This gives you

Oxygen Consumed in Three Hours, in Parts per 100,000.

Sample of sewage	1.205
Sample of septic tank effluent	1.205
Sample of purified effluent	.328

To show what these tests indicate, I would compare them with those of tests of Manchester and Oldham sewage, given on page 39 of Fowler's work on "Sewage Works Analysis."

Oxygen Consumed in Four Hours, in Parts per 100,000.

Manchester	sewage,	crude	12.24
"	"	from septic tank	8.40
"	"	purified effluent	.83
Oldham	"	crude	5.14
"	"	purified effluent	.80

By comparing these the Leavenworth effluent is seen to be very superior to these other effluents, which are typical and satisfactory, although owing to the dilution of the Leavenworth sewage, the oxygen absorbed by the crude sewage is very little.

Dr. Hoffman's tests show a reduction of nitrogen, indicated by the albuminoid ammonia, equivalent from 13.167 to 1.805. This is a reduction of 85.5 per cent. This roughly represents the percentage of organic matter removed by the process, but does not take into account that portion of the organic matter that enters the tank in large particles or lumps, too large to readily enter the stoppered bottles used to take samples.

The bacteriologic examination shows such a small number of bacteria that we would prefer to rely on the results of Dr. Edwards. If the figures given for the purified effluent are anywhere near the truth, the number of bacteria present in these samples is astonishingly small.

Very respectfully,

THE MUNICIPAL ENGINEERING CO.,

(Signed) W. M. VENABLE, General Manager.

NEW YORK, January 28, 1905.

The CONSTRUCTING QUARTERMASTER,
Fort Leavenworth, Kansas.

DEAR SIR: We herein tablify the results of three sets of tests of oxygen absorption made of the samples taken on the same day and examined by three competent experts:

Tests made by	Parts per 100,000 oxygen absorption.
Dr. C. H. Hoffman, Des Moines, Iowa (3 hour test)	.328
Dr. Edwin Hodge, Washington, D. C. (No. 1)	.495
(No. 2)	.454
Dr. J. T. Edwards, Fort Leavenworth (4 hour test), (No. 1)	1.856
(No. 2)	1.713
Dr. Edwards, samples, January 11	.714
" " " " 18	.582

Dr. Hodge gives also .055 and .042 parts of nitrogen as albuminoid ammonia per 100,000.

Our guarantee at Fort Des Moines, which was considered sufficient for an effluent discharged into the headwaters of the Mississippi River, was that the effluent should contain not more than .148 parts of albuminoid ammonia, nor absorb more than 1.43 parts of oxygen in four hours' test. The effluent at Fort Leavenworth is about three times this pure, and certainly is suitable for discharge into the Missouri River. Dr. Edwards' tests show that it continues to improve.

. . . . . .

Very respectfully,

THE MUNICIPAL ENGINEERING CO.,

(Signed) WILLARD YOUNG, President.

The system operated with but little attention during the winter. On April 1, 1905, the writer visited it and reported as follows:

"This system has been placed in an entirely different condition from that when I last visited it, by the cutting down of the surplus water. There are now fifteen doses per day, of about 30,000 gallons or less each, or about 450,000 gallons per day, — less than 150 gallons per person. In December there was almost three times as much water. Now the sewage is much more concentrated. It remains in the septic tanks between 18 and 24 hours. The flow also fluctuates now, there being sometimes 75 minutes between doses (1¼ hours) and sometimes as much as 150 minutes (2½ hours). Briefly, the former condition was that when every faucet was left running all the time, and the flow was steady, though the concentration of the sewage variable. Now the sewage is more uniform in character, much more offensive, and fluctuating in amount. There is also a fluctuation during the week, Monday having about 60,000 gallons more than Thursday and Friday.

"Mr. Jones has been adjusting the siphons to longer periods; but he has gone too far, and I have had to shorten the period of contact.

"All of the beds have stood and are performing their duty, but the effluent is not as good as formerly. The aëration of the middle set of beds is very poor. I think I can improve it by an inexpensive change in the piping at the headers delivering water to the beds, making the water enter the lower set of pipes instead of the upper. The siphons are working well.

"We are experiencing the same trouble in filter beds *C* and *D* as we had in beds *E* and *F*, but with the plan heretofore set forth I hope to overcome all difficulties. The smaller crushed stone is possibly decomposing and crumbling into a pasty mass. Mr. Jones tells me that there is six inches of such material in

each of these beds, but I knew nothing of this, the beds being entirely laid when I first came here."

The trouble in beds *C* and *D* did not continue to increase as rapidly as feared. The following table shows the consumption of water at this Post for a period of nine months following complaints made by the builders of the sewage works, because of the excessive surplus of water turned into the sewer. These complaints resulted in a complete overhauling of the plumbing of the Post and a saving of some $25,000 per annum to the Government in water bills.

Consumption of water during month of	Gallons.
January, 1905	33,614,372
February, 1905	26,574,196
March, 1905	18,267,656
April, 1905	15,749,140
May, 1905	15,864,332
June, 1905	16,669,180
July, 1905	14,940,552
August, 1905	15,083,869
September, 1905	11,174,374

During all of this period the plant was operated by the Government, the writer visiting it a few times in the interests of the builders. Some experiments were directed by him through correspondence and carried out by the foreman in charge. The object of these experiments was to improve the aëration of the second set of contact beds by drawing a mild current of air through them into the stack of the garbage crematory connected with the plant. Late in 1905, the foreman reported clogging of the first set of beds, which were covered with concrete and earth, so that they could not be examined with the eye. Experiments were then instituted to improve the aëration of these beds, and from reports received by letter were apparently successful. However, upon visiting the works on November 4, the writer found the conditions worse than he expected,

as shown in the following extract from a letter dated November 5, 1905:

"The dose from the dosing tank backs up in the pipes leading to the filter beds each time the siphon discharges and overflows the partition wall between the two siphon discharge passages so as to go into both of the first two contact beds instead of into one only, each time. This causes the dose to discharge slowly, requiring 20 minutes to discharge instead of 7½ to 10 minutes when beds were not clogged.

"The purification is entirely adequate, but the beds *A* and *B* are clogged to a considerable extent."

Instructions were given to test the ventilation of these beds by measuring the draught in the vent pipes. A few weeks later the cover of the beds was removed in places and the distributing pipes for sewage examined. They were found filled with a mixture of fine sludge and grease, with some clay in the smaller pipes, which were embedded in the crushed stone of the filter. The interstices in this stone near to the top surface were also almost completely filled with sludge.

The presence of the grease was the most unexpected matter discovered, and the writer at once investigated it. He found that a large steam laundry had been installed at the Post, and was discharging a grease-saturated poisonous effluent into the sewer. This was the cause of the pipes becoming clogged so rapidly after the trouble first was observable, and if this was the chief cause of the trouble the beds ought to regain a considerable portion of their lost capacity if the grease was removed and the beds rested. The presence of this grease so interfered with the septic process as to make it impossible at this time to make any accurate observation of the process with a view to regulating it so as to secure better results in the filter beds.

The Quartermaster-General, upon having his attention brought to these conditions, directed that the laundry effluent be disposed of otherwise. The writer advised preliminary

VIEW OF CONTACT BEDS AT FORT LEAVENWORTH, KANSAS, OVERGROWN WITH WEEDS.

treatment to remove the grease and alkali, but as the effluent was sterile it was concluded to dispose of it by an independent pipe line to the Missouri River. The covers were removed from beds *A* and *B* and their liquid capacity measured after the beds had stood idle for several weeks. It was found to be about 20 per cent less than when the beds were first put in service. This was in January, 1906; and owing to the season the Post Surgeon and the writer recommended that no further work be done upon these beds until warm weather. When warm weather should arrive, the writer recommended that connections to draw the odors from the first set of contact beds through the crematory be restored, but in such a way as to leave the surface of the beds open, so that they could be kept in condition, instead of covered with concrete so as to be inaccessible. His capacity measurements and other tests demonstrated conclusively that in the first set of beds *A* and *B*, the clogging was mainly in the upper portion, and after the trouble caused by the laundry, which left little permanent injury after several weeks of rest, had been removed, that the beds would be serviceable for a considerable time. Beds *C* and *D*, however, appeared to be clogged more in the bottom than at the top; and the aëration at the bottom of these beds needed improvement. The writer also recommended the installation of a system of by-pass piping by which any of the six contact beds could be cut out of service for a few days' rest, whenever desired.

The whole system was put into operation without any of these improvements, however, in January, 1906, and shortly thereafter the laundry effluent was diverted to the river. From then until June 12, 1906, the writer did not visit the system, but on June 12 he stopped at the Post while passing through Leavenworth on other business. No adjustment of the septic tanks to make the effluent more oxidizable had been made after the laundry effluent was diverted, and the beds had been allowed

to become covered with weeds, as shown in the illustrations, taken at the writer's direction on that date. No system of sewage purification works will stand such treatment as this long; but the effluent on June 12 was very creditable, creating no nuisance in the very small stream into which it discharges a mile or so from the Missouri River. Upon test, made by the Post Surgeon, it consumed about 1.9 parts of oxygen per 100,000 parts.

The septic effluent was very much overtreated and was offensively stale, and laden with the sludge caused by too long retention in the tanks. Consequently the contact beds were again much more reduced in capacity than would have been the case were the tanks adjusted to the requirements of the new flow. In other words, the sewage of 400,000 gallons liquid was being treated in the same tanks as the 1,200,000 gallons, containing the same total quantity of impurities. Though no longer having any business interest in this plant, the writer reduced the septic period of flow about two fifths, knowing that better results would follow. He could not, however, remain to experiment to determine accurately the best adjustment.

The dose delivered to the beds had not been reduced as the beds became active with bacteria, consequently the beds *A* and *B* were being flooded, the timing device was rendered inoperative, and the aëration of the sewage deficient.

Under these circumstances it was astonishing that the purification was so good. That it was so is explained by the fact that the contact is thrice repeated; so that though each part of the system is improperly looked after, nature steps in and lends a helping hand by doing some adjusting herself.

With the exception of a small part of beds *E* and *F*, all six of these contact beds were completed before the writer had any connection with this work, and he did not overhaul them as he did those at the plant at Fort Des Moines. The material used was native limestone crushed to various sizes.

This material is too easily dissolved to make it the most advisable where other material can be procured at reasonable prices. Moreover, if limestone is crushed and then screened to grade it into particles of various sizes, the finer particles obtained are apt to be composed of softer and more perishable parts of the rock, and they undergo more rapid decomposition when exposed to water. However, it is not necessary to use the dirt or fine stone screened out when the rock is crushed.

In June, 1906, it being intended to enlarge Fort Leavenworth from a Post of 4000 to one of 6000 persons, bids were asked for the enlargement of the sewage purification works, with modifications. The lowest bid received was in the neighborhood of $50,000 (the original plant with crematory costing only $47,000), and the work was not let. The unaltered plant operated throughout the summer without causing complaints, and in March, 1907, work of overhauling the filter beds by prison labor was commenced.

Fort Leavenworth Sub-System. At Fort Leavenworth, Kansas, a few houses are so located that the sewage from them cannot run into the main sewer, and it is collected in a small sewer and conveyed to a small purification plant on the bank of the Missouri River.

This plant was completed, with the exception of a dipping and dosing pan, at the time the writer was called upon to take charge of the work. It was completed according to the original plan, and subsequently modified, to overcome defects.

The works consisted of a septic tank, an upward anaërobic filter, an aërating chamber, a dipping and dosing tank, and two aërobic percolating filter and contact beds, in combination with an open intermittent sand filter. After operating for several months, the sand filter became clogged and refused to take the sewage, the enclosed aërobic filter became anaërobic from lack of air supply, and the anaërobic filter clogged and caused

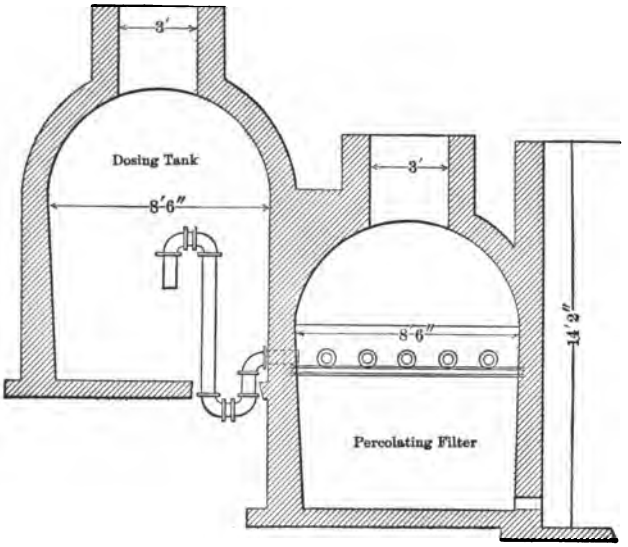

Section through dosing tank and filter.

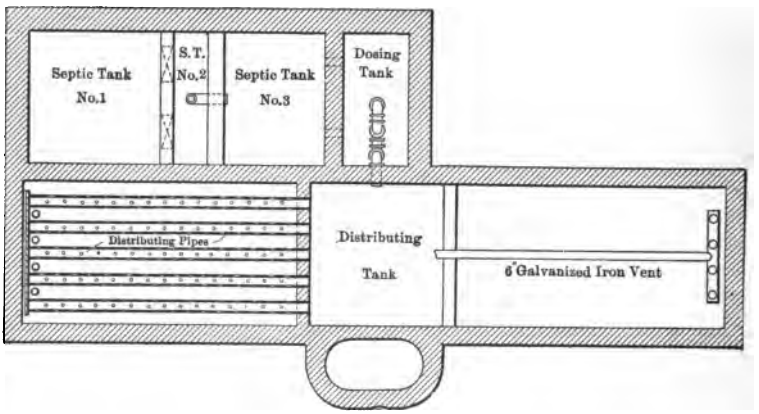

Plan

Fig. 42. Enclosed works of sewage purification sub-system at Fort Leavenworth, Kas.

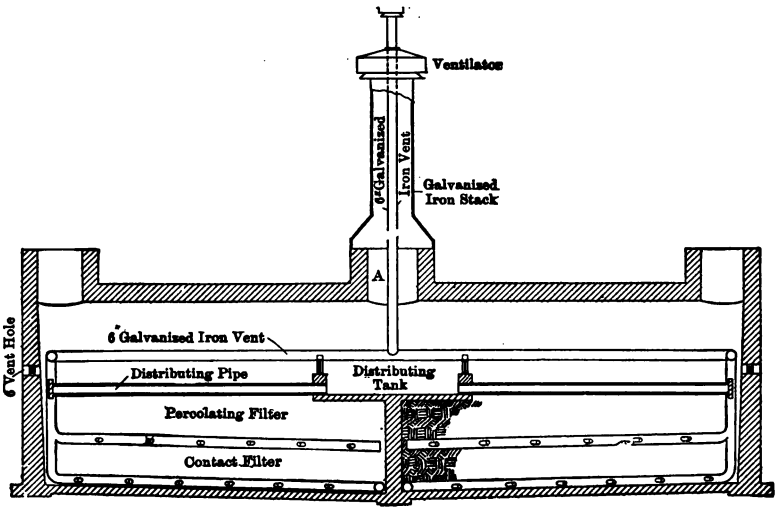

Longitudinal section of enclosed filter.

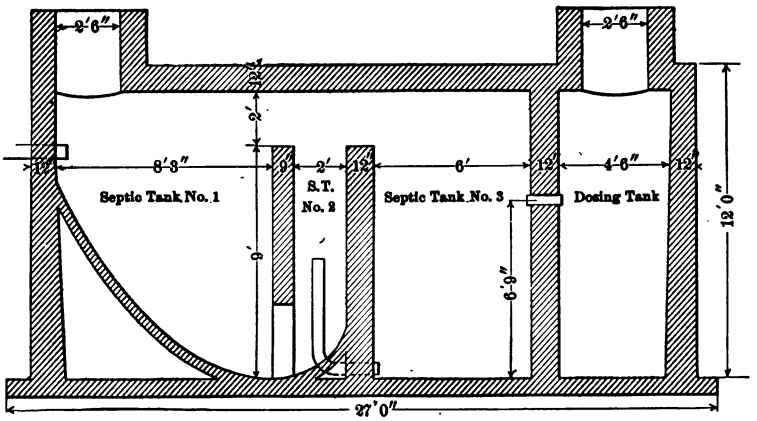

Section through septic tanks.

Fig. 42. Enclosed works of sewage purification of sub-system at Fort Leavenworth, Kas.

water to back up in the sewer, and the hinges of the dipping tank broke. These defects were remedied by modifications in the design. Figure 42 shows the enclosed works of the system, after the troubles were overcome. The space marked *Septic Tank No.* 2 was first filled with broken stone. This was removed. The space marked *Dosing Tank* was originally an " aërating chamber " for the liquid to spill over a weir. It was converted into a dosing tank by the installation of a simple siphon, designed by the writer. This siphon discharges with great rapidity. It discharges only a portion of the contents of the tank at one time.

The siphon discharges into the middle space of the percolating filter, where marked on the plan *Distributing Tank*, where the dipping and dosing pan was formerly located. Thence the liquid is distributed by perforated iron pipes over the surface of both filters at once. This percolating filter was originally provided with three manholes covered with iron plates having small round holes in them to admit air, but the air did not enter in sufficient quantity. In fact, upon removing the covers to make repairs, it was found that lights lowered into the chamber were extinguished. Properly to aërate this filter without causing a nuisance was the principal problem to be solved.

Several methods were worked out, as follows:

1. The most effective method suggested is to install water jets to blow air into the clay pipes embedded in the filtering material. The jets should be provided with nozzles that can be renewed from time to time, as they may wear. The diameter of the inside of the nozzles should be one-sixteenth-inch when new. The outside diameter of the nozzles should be one-eighth-inch at the tips. The air passage into which these nozzles enter should be nine-sixteenths of an inch in diameter at the smallest opening.

There should be two such jets, one for each side of the piping

system. The calculation of these sizes is based on the following assumptions: That the head of water available is not less than 50 feet, and that the volume of air required to aërate the filter is 1570 cubic feet per day. For what this volume represents, see the notes regarding the next method of aërating the filter in this memorandum.

One thousand five hundred and sixty cubic feet per day is at the rate of 30 cubic inches per second. Assuming that the air moves with an average velocity at the smallest opening equal to four fifths of the velocity of the water, we have corresponding to the head of 50 feet a velocity of air of 40 feet per second. Thirty cubic inches per second moving with a velocity of 40 × 12 inches per second requires an opening with a cross-section of one-sixteenth square inch. The dimensions given above are ample for this quantity, and for the necessary amount of water, — in fact, the jet proposed could be made very much smaller if it were safe to make it so on account of danger of the nozzle becoming clogged.

The method here mentioned would be best supplemented by placing vents in other portions of the structure.

2. The next best method of ventilating is by the use of gasoline flame. The amount of sewage handled is, according to previous measurements and calculations, about 300 gallons per person, for 100 persons, or about 30,000 gallons per day. This is at the rate of 4000 cubic feet, or 256,000 pounds per day. According to analyses of the sewage, .00002 part of oxygen are required for each part of sewage. This gives a total of about five pounds of oxygen consumed per day. Assuming that the oxygen is entirely absorbed from the air supplied, there would be required 25 pounds of air per day, or a volume of 312 cubic feet. If only one fifth of the oxygen is taken from the air supplied, we would have to supply 125 pounds or 1560 cubic feet of air per day. This is at the rate of 65 cubic feet per hour, or 1.1 cubic feet per minute. Assuming that this is

to be drawn through a six-inch pipe, the velocity of the flow would be (allowing an effective area of 20 square inches for the pipe),

$$\frac{1.1 \text{ ft.} \times 144 \text{ sq. in.}}{20 \text{ sq. in.}} = 7.9 \text{ ft. per mt.} = .13 \text{ ft. per sec.}$$

An elevation of 1.6 degrees F., in the temperature of the gases discharged from the filter above the temperature of the outer atmosphere would produce a draught of this velocity through a stack 10 feet high. The burning of one pound of good oil would raise this quantity (125 pounds) of air about 350 degrees; therefore it is plain that a very small lamp would suffice to produce the draught necessary, making liberal allowances for surplus head used in drawing air through the filtering material.

In this arrangement the air is drawn out of the rock, entering it from the top surface, with the sewage. There must be other openings for the air to enter the closed chamber to pass down through the rock. The direction is the reverse of that employed in the case where a jet of water is used.

3. The other alternative is to install ventilators on the two headers connected with the clay pipes, and to carry them through the roof; also to install other vents to keep the interior of the filter full of fresh air. Inlets for fresh air must likewise be provided, in any case. The last method of ventilating depends upon the wind to make the ventilation effective to its full capacity. It would, doubtless, however, remedy the present condition to a great extent.

It was found that water for this purpose could be obtained readily, and the water jets were installed in the pipes leading to the interior of the filters. The results have been entirely satisfactory, and no attention worthy of remark is required, but renewal of jets will become necessary in time.

The percolating filter is discharged upon the sand filter by an

automatic siphon. The sand filter was doubled in area and reduced in depth, and constructed as two filters, either one of which may be used while the other is rested. There has been no further trouble for about two years since the improvements were made.

It is necessary occasionally to clean out the holes in the iron distributing pipes in the percolating filter.

The quantity of sewage handled by this system when completed was about 5120 gallons per day. There is a dose of 85 cubic feet through the siphons about once in every three hours.

CHAPTER XI

SUGGESTED DESIGNS TO MEET TYPICAL CONDITIONS

HAVING in the preceding chapter given an account of the difficulties actually met in three installations, the writer will now give for illustration some plans and specifications for plants to meet certain conditions of location and to avoid the difficulties most frequently encountered in the past, as far as that is possible.

I. Let us take a typical case, such as may be met in many parts of the United States. The following conditions are assumed:

The population to be served does not exceed two thousand, and the sewage per capita is one hundred gallons, making a total average daily flow of about 200,000 gallons. The location available is a hillside, where the area occupied by the works is not of much importance, as the value of the land is moderate. The discharge is to be into a small stream that is fed by springs, and occasionally dries out in summer; and it is necessary to secure sufficient purification to prevent a nuisance, and to make it safe for cattle to drink the water in the stream. Simplicity in operation is a prime requisite, as the plant will be looked after once a week by a steam-engineer. There is no natural sand available without screening, but good glacial gravel a mile or two distant, in a small river.

To meet these conditions the system illustrated in Fig. 43 is suggested, to which the following explanatory specifications apply:

The system shall consist of a grit chamber, three septic tanks, a grease arrester, an open dosing tank which shall likewise be a contact bed, six open contact beds and a sand filter, together

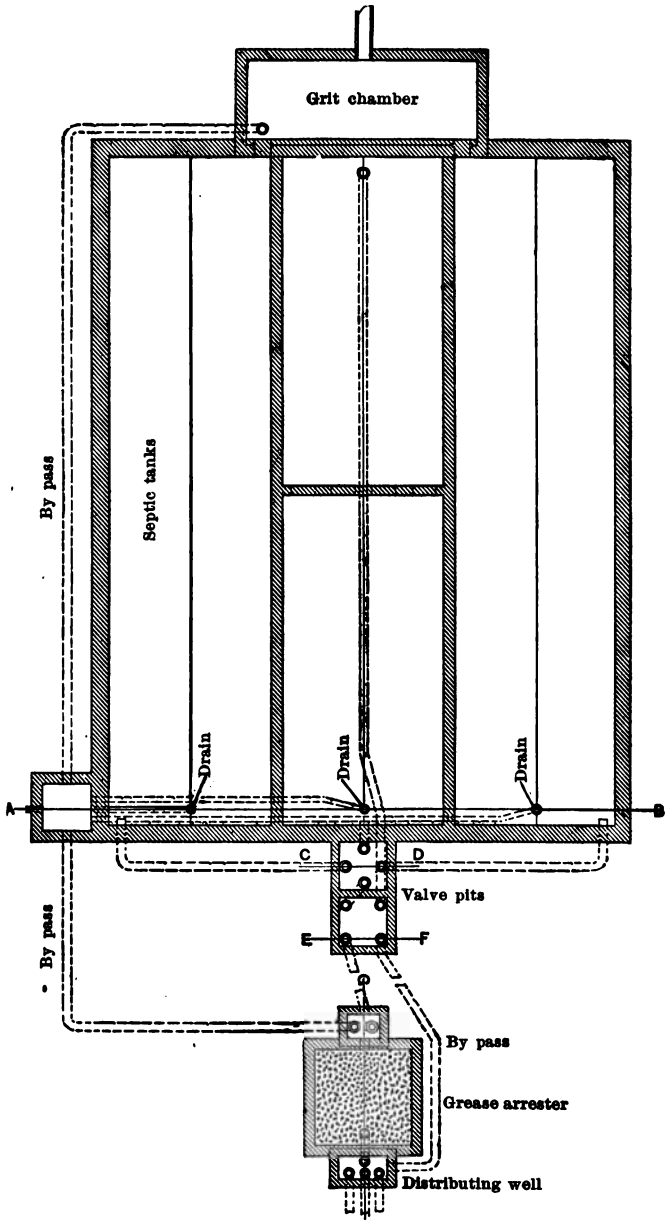

Fig. 43. Plan of septic tanks.

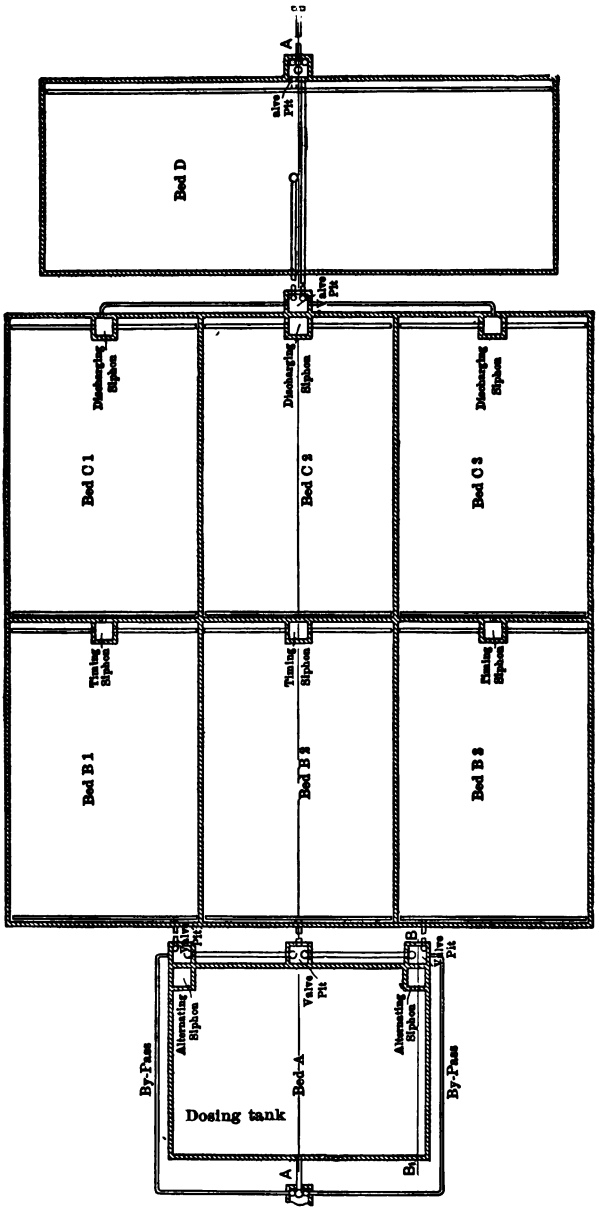

Fig. 43 (continued). Plan of filter beds.

with all piping, ventilating devices, manholes, valves, siphons, and regulating apparatus necessary for operation under all conditions as shown on the plans, all complete and connected to the present sewer.

The grit chamber shall be arranged to receive the raw sewage from the sewer, retain the heavy solid matter and pass the floating

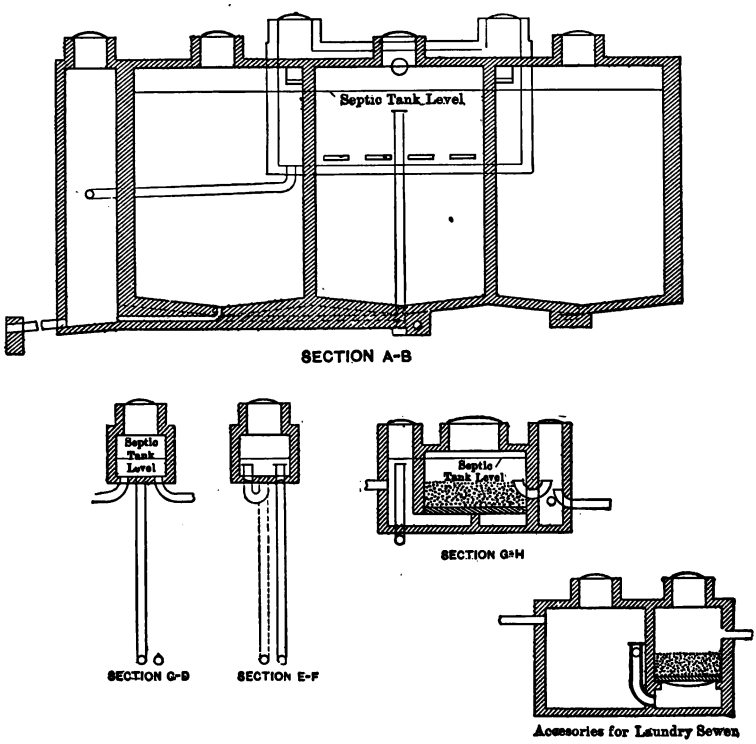

Fig. 43 (continued).

and suspended matter into either one or both of two of the septic tanks, over weirs controlled by sluice gates. There being ample fall available in the site selected, the bottom of the sewer shall enter this grit chamber six inches higher than the top of the weir. The level of the liquid in the septic tanks shall be about six inches below the weir. By this means the formation of a

mat on the surface of the sediment chamber which interferes with proper removal of sediment will be largely prevented. The grit chamber shall also be provided with a valve to by-pass the sewer to the creek into which it will flow, in case of necessity.

The septic tanks shall be three in number, built as one structure, and arranged so that one, two or three may be used at any time, as may be most advisable to secure the best results. The connections shall be so that either one of two tanks may be used alone, or in series with the third tank; or so that two tanks may be used in multiple either alone, or in series with the third. Any tank may be cut out of service, or drained, without interfering with the operation of the others.

From the septic tanks the sewage shall flow to a coarse rock filter to assist in breaking up or removing undissolved grease with by-pass and drains to permit removing the rock without interfering with the operations of the filter beds. (It may be called an anaërobic filter or a roughing bed.) Connected with this shall be a by-pass for diverting the septic sewage from the filter beds to the creek, in case of necessity, and a distributing well for directing the sewage to the dosing tank, or to any two of the first set of contact beds, as may be desired. There being plenty of fall available, there shall be allowed three inches fall for the piping and connections in the septic tanks and therefrom to the coarse rock filter, twelve inches across said filter, and six inches from same to the high water level in the dosing tank.

The dosing tank shall be of the dimensions shown on the plan as bed *A*. It shall contain a pair of automatic alternating siphons, located at opposite ends of it, connected with pipe lines as shown, so that the alternate doses from the tank may be directed at will to any two of the first set of contact beds, one bed of the set being in reserve. The dosing tank shall be filled to the level of the bottom of the sewer intake pipe with suitable coarse gravel. There shall be no distributing pipes in the surface of the gravel, it being the intention to confine such

clogging as may take place to as near the pipe as possible. The siphons shall be capable of regulation as to the head at which the discharge takes place.

The filter beds shall be arranged in two sets of three each, the beds of the two sets being arranged in pairs, the two beds of each pair, at different levels, connected by timing siphons. The beds of the second set shall be discharged by automatic siphons, but not timing siphons.

All the beds of the second set shall discharge into a filter bed of coarse sand. This bed shall be connected in the system so that it may be by-passed at any time. It shall also be provided with a spillway and a regulating pit by which the head of water across the sand may be made as great as desired, up to a maximum of three feet six inches. The sand for filtration shall be deposited in a layer inclined to the horizontal, resting upon a bed of gravel beneath, so that carbonic acid gas, which is generated in large quantities by the bacterial action in the sand, may accumulate in the gravel and escape with the effluent instead of becoming entrapped and preventing the exertion of the full head of liquid across the filter, or bubbling up through the sand and disturbing it. This bed forms a deep pool of great capacity, in which the water is retained for a considerable time, thoroughly mixing, completing the combination of the organic material with the oxygen in solution, and producing a very uniform effluent.

All of the anaërobic portions of the system shall be covered and all of the aërobic portions open. All filtering materials shall be screened from glacial gravel and carefully graded.

The arrangement of pipes, valves, and auxiliaries shall be such that by-passing of any portion of the septic tank, the coarse rock filter, the dosing tank, any pair of contact beds, or the sand filter, may be effected without throwing the other parts out of service. The system may be operated at from one third to full capacity with the efficiency specified, and will

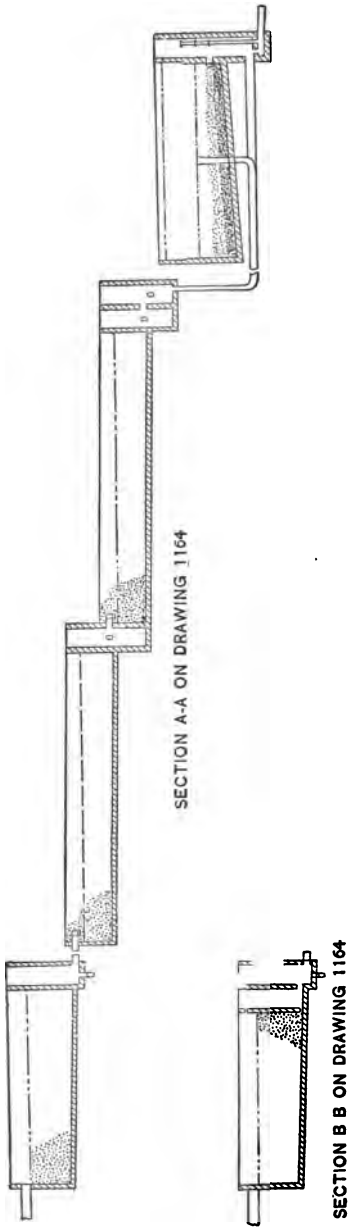

Fig. 43 (continued). Profile of filter-beds.

continue to produce the required purification if, owing to scarcity of water supply, the sewage becomes thrice as foul as is anticipated at this place, provided the necessary valves are operated as intended.

The care required, under ordinary conditions, will be the visit of a competent mechanic once a week to cut one pair of contact beds out of service and connect in service the idle set, and to inspect the operation to make sure that no accident or stoppage has occurred. At longer intervals the removal of the rock in the coarse rock filter will be necessary; and at still longer intervals the renewal of the gravel in the dosing tank nearest to the outlet from the septic portion of the system, may be required.

As the dosing tank is likewise a contact bed, this is a triple contact system, with final settling pool and sand filter. The period of contact in the dosing tank is, of course, very short, the tank filling up to a certain level and then discharging rapidly into one of the next set of beds. The period of contact in the beds of the second set is subject to regulation; the beds may be caused to discharge as soon as filled, or each may hold the liquid until just long enough before the next dose is due to allow it to drain before that dose arrives. Each bed in the next set commences to discharge as soon as the liquid reaches the necessary height in its siphon wells.

To understand completely the operation of the beds *B*-1, *B*-2, and *B*-3, and *C*-1, *C*-2, and *C*-3, it is necessary to observe that the bottoms of these beds are on a slant, draining toward the siphon wells. The liquid enters and leaves the beds through header pipes at the ends of the beds, having to filter through each bed from one end to the other, while in discharging the beds are very completely drained. The fineness of the material in beds *C*-1, *C*-2, and *C*-3 is such that an appreciable time elapses between when liquid enters these beds and when it rises in the siphon pits to discharge these beds.

All masonry is to be reinforced or massive concrete. The sizes of filtering material in each bed are to be determined by the engineer after mechanical analysis of the gravel available, so as to grade same to greatest advantage. In general, a grade shall consist of pebbles of from any predetermined diameter to those of one fourth that diameter, as from two inches to one-half inch in the grease arrester and the dosing tank, one inch to one-quarter inch in the first set of contact beds, one-quarter inch to one-sixteenth inch in the second set of contact beds. This material is preferably to be excavated by hydraulic dredge and screened in running water.

(It is not intended to give complete engineering specifications here, merely suggestions peculiarly applicable to this particular work.)

This system could be built at a liberal profit and operated four months by the builder, for between $15,000 to $16,000 — including all engineering expenses, royalties on patents, etc. — that is, at about $8.00 per person served. It contains about 3200 cubic yards of excavation, 550 cubic yards of reinforced concrete, and 1120 cubic yards of gravel and sand, or 14 cubic feet of filtering material per capita. The land actually used by the various filter beds is at the rate of one acre per 720,000 gallons of sewage per day. Besides these principal items there are many smaller items, such as pipes, siphons, etc., and the engineering expenses allowed are heavy. The total volume of filtering material, 30,240 cubic feet, is only slightly greater than the daily flow of sewage, 26,666 cubic feet. The preparation of this is the most important and expensive part of the work.

The period of contact is, however, very short, being only forty-five minutes between discharges from the dosing tank and one hour and thirty minutes between discharges in the other contact beds, with one third of the system in reserve. The septic tank is compound and capable of regulation. Any

part of the system could be rebuilt, if desired, without interfering with any other part.

II. The next case taken is a plant to handle a sewage measuring 4800 cubic feet of water per day, contributed by not more than

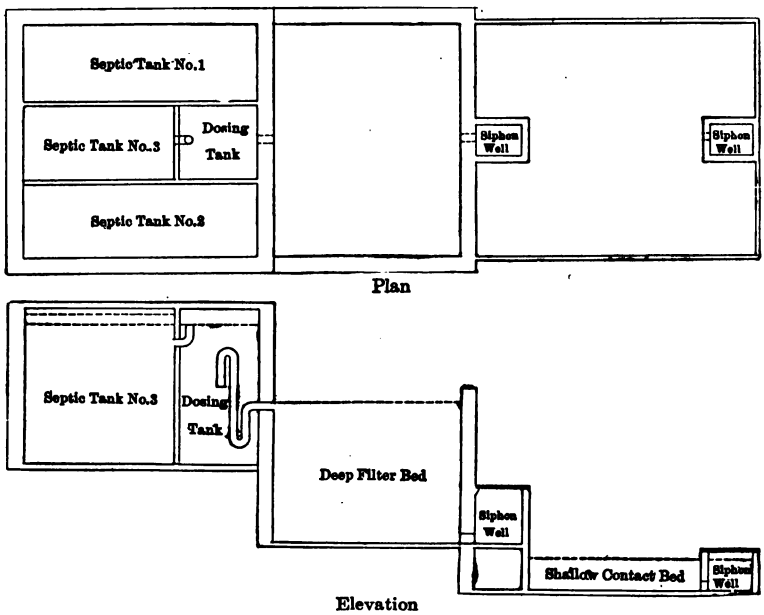

Fig. 44. A simple combination for a small institution.

200 people, — children in an institution. This allows twenty-four cubic feet of water per capita, or about 180 gallons per capita per day. The amount of money available is only $2000, — or $10.00 per capita for all expenses, including engineering.

The design recommended in this case is shown in outline only in Fig. 44. The description is as follows, which gives the relative sizes of the various parts. The location is on a steep hillside, with a slope beneath.

The following specifications are intended to provide a system of purification that will produce an effluent which is colorless, odorless, and non-putrescible, and which may be discharged into the ravine without any offense.

1. **Septic Tank.** This shall be 11 feet deep and 15 feet square, inside. It shall be divided into three compartments of equal size by partition walls. These compartments shall communicate with one another by passages, submerged at such levels that neither sludge nor scum shall be able to pass from compartment to compartment. The sewer shall enter into one compartment six inches from the top, and the water shall stand in the tank between six inches and fifteen inches from the top.

The septic tank shall be built of concrete-steel and shall be covered with a roof of concrete-steel. A manhole opening covered with an iron lid shall be provided for each compartment. The top of the tank shall be covered with two feet of earth to protect it from the weather.

2. **Dosing Tank.** This shall consist of a compartment five feet square, built into the septic tank extending from top to bottom thereof. Through the outer wall of the dosing tank a siphon shall discharge. The siphon shall be placed in such a manner that each discharge shall draw about one hundred cubic feet of liquid from the dosing tank. The dosing tank shall receive liquid from the septic tank, on a level with the surface of the liquid in the latter, but in such a manner that neither sludge nor scum shall enter the dosing tank. The dosing tank shall be provided with manhole and cover.

3. **Deep Filter Bed.** This shall receive the septic effluent from the dosing tank. It shall be 9 feet 6 inches deep, and 12 feet by 15 feet in area, inside the walls. The top shall be open to the outer air. It shall be filled 9 feet deep with filtering material, in which shall be embedded six sets of drain tile and ventilating pipes. The ventilation of this bed shall be operated positively by each descending dose of liquid. The lower 3 feet of this bed is a contact bed discharging automatically by a

siphon each time it has received two doses from the dosing tank. The walls shall be of concrete-steel.

4. **Shallow Contact Bed.** This shall be lined with concrete and concrete-steel slabs. It shall be 15 feet by 18 feet in area, and 2½ feet deep, filled 2 feet deep with filtering material. It shall be discharged automatically by a siphon.

5. **Filtering Material.** This shall be "Joplin Gravel," carefully screened on a steel screen with oblong openings $\frac{3}{16}$ inch or ¼ inch wide to remove dirt and soft, fine stone. It must be screened either when perfectly dry or in running water, and not under any circumstances when moist.

6. **Emergency Drain Valves,** to drain the system in case repairs or renewals become necessary, are to be placed in the septic tank and in the siphon well of each filter bed.

7. **A By-Pass** normally closed, shall be provided around the system for use in case of repairs or renewals. The drain valves shall communicate with the by-pass by pipe lines.

8. **Sewer Connections.** The present sewers leading from the institution shall be connected with the purification system by suitable sewer pipe lines. An effluent sewer pipe shall also be provided, conducting the effluent to a point twenty feet from the shallow contact bed.

9. **Concrete-Steel.** This shall be made of concrete composed of 1 part Portland cement, 3 parts of sand, and 7 parts of Joplin gravel, in which shall be embedded ½ inch corrugated steel rods. Walls shall all be built between forms, or between forms and bank, except the shallow contact bed. In the shallow contact bed the walls shall be made of slabs of concrete as above specified, with "expanded metal" embedded in them. Slabs

are to be made separately and set in place like curbing. They shall rest on a concrete footing.

All bottoms of tanks and beds shall be of concrete but not reinforced by steel.

10. Siphons. These shall be of ample size and designed to discharge at a high rate. The termination of discharge of the dosing siphon shall be sudden. The siphons to discharge the contact beds shall be adjusted to cease discharging before the next dose shall enter the bed.

. . . . . .

In this case the total quantity of filtering material used is 80 cubic yards, or 4.4 cubic yards per capita. The sewage, however, is originally more concentrated, and the purification sought is not as good as in the first case instanced. On the other hand, the system is designed to work with almost no attention, there being no part subject to regulation.

. . . . . .

The smaller a system of sewage purification works, the simpler it should be in operation, as small systems must operate with little attention, and the attention that they do require should be only occasional. Contact beds are simpler to operate and require less frequent attention than percolating filters or even than intermittent sand filters, if they are constructed in the simplest possible manner. The care required after the capacity of the septic tank has been adjusted to secure best results, is that necessary to keep the automatic discharging devices in good operation, to keep the beds sufficiently free from weeds so that aëration will be easy and the interstices of the filtering material will not become filled with roots and other materials, and to rest a bed occasionally when it shows signs of becoming clogged. Several contacts of short duration are more effective than a single contact of long duration. Siphons that discharge automatically each time the beds be-

come filled to a certain height are more reliable and less likely to get out of order than timing siphons.

III. For a very small installation, where beds can be arranged in sequence on a gentle slope, the following design is suggested as perhaps as simple as any that can be devised. A septic tank of proper size, followed by several contact beds arranged in sequence, with a by-pass pipe located so that any bed may be cut out of service when desired, simply by opening one valve. On this plan as many beds as desired may be used, to take advantage of the fall available, with but little excavation. Where the soil is impervious clay, the beds may be simple excavations in it, filled with gravel screened to remove all the sand and smaller stones; but masonry linings are desirable wherever the funds available are sufficient to permit them. No drain tile is desirable in the beds.

Matters requiring particular attention in the design are determination of the relative sizes of the beds, and the size of the siphons. Assume that the first bed will be filled from the septic tank in one hour, and that the siphon discharges it into the second bed in fifteen minutes. The total quantity discharged is then equal to the flow of one hour and fifteen minutes. If the siphons are all alike and the beds are new and of equal size, the second bed will begin to be discharged by its siphon when it has received the original contents of the first bed, — one hour's flow, — and it will continue to discharge until the one and one-quarter hour's flow has passed. This will take about one half an hour to fill and empty the second bed, when it will rest empty for three quarters of an hour. The third bed will behave in the same way. The total period of contact of the liquid in all of the beds will thus be equal to about the time that it takes the liquid leaving the septic tank in an hour and a quarter to pass through all of the siphons in sequence, — that is, fifteen minutes or so for each bed, — but the period of rest will be about an hour per bed. In such a system

it is obvious that determination of the size of the siphons is a matter of great importance. If this is made just right, the system will work with regularity without daily attention; and as all of the beds are of equal size, and of somewhat less capacity than the dose passed each time, any one can be cut out without interfering with the others. By employing a considerable number of contacts of short duration in this way the writer believes that as high a degree of purification can be secured as with a percolating filter containing an equal quantity of filtering material, and employing the same total fall, if not a higher degree, and that there will be much less trouble keeping the system in order; but the area required will be greater than for the percolating filter, and if masonry bottoms are necessary the cost will be much greater.

IV. For a system where considerable fall is available and where a high degree of purification is not desired, it will be found that a dosing tank with three or more contact beds arranged at the same level, to receive sewage in sequence by means of Adams alternating siphons, is a very satisfactory arrangement requiring very little attention, and not likely to get out of order. The contact beds may be discharged individually by timing siphons of any suitable design, making an arrangement similar to that shown in Fig. 40, if the first set of beds (A_1, A_2, A_3,) only were used. It can be relied upon to oxidize about two thirds of the albuminoid ammonia contained in the septic tank effluent. The beds may be equally well discharged by automatic siphons operated by the filling and emptying of adjoining beds, — as in the devices of Priestman and others. This method is somewhat simpler in some respects, but is not capable of as nice adjustment of the period of contact as the timing siphons. It is superior, however, in the important respect of allowing each bed to drain a longer period than the writer has found practicable with timing siphons under the varying conditions obtaining in actual works.

Where, owing to there being only enough fall available for

single contact, it is desired not to use a dosing tank, the beds must be filled from the septic tank at the same rate as the sewage flows into the works. To do this some automatic device for connecting each bed to the septic tank in turn, and for discharging it at the proper time, must be employed.

V. In case sprinkling percolating filters are used, the problem is reduced to determining the dimensions of the beds, the method of applying the liquid, the material for the filtering medium, and the means of drainage and aëration. These are all independent details for the engineer, each one of which is to be determined upon its merits and its cost at the locality. Therefore no detailed descriptions of such plants are here suggested. Neither are illustrations given of any large systems, the purpose of this presentation being to illustrate principles sufficiently to suggest combinations that may be useful rather than to indicate designs for any special cases.

INDEX

PAGE.

Aëration of Filters 147
of Contact Beds. . . . . 85 to 89, 172, 173, 204, 205
of Percolating Filter 119, 123, 124, 126, 127
of Sand Filters 27, 82, 84
of Waring's Strainer 43
Aërobic Processes Classified 20
Air — Quantity Required to Purify Sewage 20
Absorption of, by Water 21
Alvord, John W. 160
Anaërobic Filtration . . . . 43, 74 to 77, 164, 166, 170, 172, 178, 190, 209
Analyses of Effluents from: —
Anaërobic Filter at Lawrence, Mass. 77
Septic Tank, at Lowell, Mass. 70
Contact Beds . . . . . 95, 96, 97, 172, 178, 194 to 203
Percolating Filters 121, 122, 124, 125, 133
Analyses, significance of . . . . . 34, 149 to 155
of Sand 29
Antecedents of the Septic Tank . . . . . 51 to 58
Application of Sewage to Filters 144
Articles about Sewage Purification, list of 15
Automatic Discharging Devices . . . . . 98 to 116
Patents Pertaining to . . . . . 98 to 108

Bacteria . . . . . 1 to 7
Baker, M. N., books by 11
Barwise, Sidney, books by 12
Beechmann, M., article by 14

Capillarity . . . . . 139 to 144
Contact Beds . . . . . 78 to 97
Clogging of . . . . . 172, 204, 206 to 209
Material for Filling 91
Patented Arrangements involving . . . . . 79 to 84
Principles Governing Design of . . . . . 84 to 91
Purification Secured, by use of . . . . . 92 to 97
Crops for Sewage Farms 25

Designs for Small Sewage Works 231
Dibdin, W. J., book by 13

PAGE.
Dilution of Sewage . . . . . 20 to 22
Drainage of Filter Beds 139

Facultative Bacteria. 7
Flow of Water in Sand 144
Fort Des Moines, Iowa, Sewage Works at . . . . . 162 to 180
Fort Leavenworth, Kan., Sewage Works at . . . . . 181 to 215
Fowler, Gilbert J., references to 13, 79
Fuller, Geo. W., references to writings 14, 32, 132

Grease, trouble due to 74, 206
Grit Chamber 74

Inspection of Sewers a Necessary Preliminary to the Design of Sewage Works 134
Intermittent Sand Filtration . . . . . 20, 26 to 33
Cost of Maintenance of 28
Irrigation as a Means of Sewage Disposal. 20

Kinnicutt, L. P., Extract from Address by 32

Land Required for Sewage Treatment, by —
Sewage Farming, or Broad Irrigation 24
Intermittent Sand Filtration 30, 32, 33
Contact Beds 97
Percolating Filters 132
Location of Sewage Works, — selection of suitable. 135

Maintenance of Sewage Works 148
Mason, W. B., book by 13
Massachusetts State Board of Health 10, 26, 32
Material for constructing Sewage Filters 146
Mechanical Analyses of Sand 29
Metcalf, L., on Septic Tank . . . . . 14, 51 to 58
Microscopic Organisms, classification of 56

Patents issued to Adams, M. J. 105, 106
Adams, H. S. 100
Alvord, J. W. 64, 108
Barbour, F. A. 98, 100
Berry, J. W. 112
Cameron, Comin & Martin 58, 99
Church & Hill 64, 88
Church, W. L. 71
Deery, J. J. 81
Ducat, W. M.. 123
Glover, A. S. 40, 46, 79
Harvey & Bruce 106

PAGE.
Patents issued to Harvey, R. 108
Hille, F. 39
Lomax, W. J. & C. J. 80
Lowcock, S. R. 119
Maignen, J. A. 81
Meyssonnier, J. L. A. 101
Miller, James S. 81
Miller, S. J. 101, 102, 103
Mitchell, G. D. 82
Moore, W. A. 106
Pfouts, O. W. 62
Priestman, A. 105, 108
Provost, A. J. 62
Ramsden, T. H. 101
Reid & Hanley 64
Ridgeway, G. E. 98, 129
Rosewater, A. 110
Scott-Moncrieff, W. D. 76, 81, 130
Shields, W. S. 101
Stoddart, F. W. 128
Union, F. L. 79
Venable, W. M. 114, 126, 127
Vibbard & Chandler 108
Waring, G. E. 43, 109
Wigner, G. W. 36
Williams & Whitman 105
Woods, B. F. 43
Percolating Filters . . . . . 20, 117 to 132
Precipitaton Tanks for Sludge . . . . . 35 to 41
Prescott, S. C., book by 13
Publications Relating to Sewage Purification . . . . . 10 to 19
Purification to be Exacted of Sewage Works 9, 136

Quantity of Organic Matter in Sewage, Per Capita. 135
Liquid Sewage Per Capita 4, 193, 204

Rafter, George W., book by 11
Rideal, Dr. Samuel, references to his book, 12, 23, 25, 26, 47, 50, 94, 124, 125
Royal Commission on Sewage Disposal, report of 10

Sand, Mechanical Analysis of 29
Suitability of, for Sand Filters 31
Sedimentation of Sewage 35, 138
Selection of a Purification System . . . . . 136 to 138
Septic, meaning of the Term 48
Action, Desirable Degree of 139
Tank, Antecedents of . . . . . 51 to 58
Definition of 49

PAGE.
Septic Tank, Gases Evolved in 49
Principles of Design . . . . . 66 to 74
Patent of Alvord 64
Cameron 58
Church & Hill 64
Pfouts 60
Provost 61
Reid & Hanley 64
Design of Stoddart 71
Sewage Farming . . . . . 20 to 24
Siphons, Principles of Design of . . . . . 108 to 116
Size of Particles in Sewage Filters 145
Sludge, analyses of 47
from Septic Tanks 66
Mechanical Removal of . . . . . 34 to 47
Secondary Disposal of 72
Stages in Sewage Purification 8
Stoddart, F. W., Experiments on Septic Tanks 71
Strainers for Sewage . . . . . 42 to 46
Straining Sewage, when required 35

Tests, Required of Engineer Operating Works. 8

Water, Quantity required for Dilution 23
Whipple, Geo. C., book by 6, 13
Wickham, J. S., tests by 178
Winslow, E. A., book by 13

SHORT-TITLE CATALOGUE

OF THE

PUBLICATIONS

OF

JOHN WILEY & SONS,

NEW YORK.

LONDON: CHAPMAN & HALL, LIMITED.

ARRANGED UNDER SUBJECTS.

Descriptive circulars sent on application. Books marked with an asterisk (*) are sold at *net* prices only. All books are bound in cloth unless otherwise stated.

AGRICULTURE.

Armsby's Manual of Cattle-feeding.....12mo, $1 75
Principles of Animal Nutrition.....8vo, 4 00
Budd and Hansen's American Horticultural Manual:
Part I. Propagation, Culture, and Improvement.....12mo, 1 50
Part II. Systematic Pomology.....12mo, 1 50
Elliott's Engineering for Land Drainage.....12mo, 1 50
Practical Farm Drainage.....12mo, 1 00
Graves's Forest Mensuration.....8vo, 4 00
Green's Principles of American Forestry.....12mo, 1 50
Grotenfelt's Principles of Modern Dairy Practice. (Woll.).....12mo, 2 00
Hanausek's Microscopy of Technical Products. (Winton.).....8vo, 5 00
Herrick's Denatured or Industrial Alcohol.....8vo, 4 00
Maynard's Landscape Gardening as Applied to Home Decoration.....12mo, 1 50
* McKay and Larsen's Principles and Practice of Butter-making.....8vo, 1 50
Sanderson's Insects Injurious to Staple Crops.....12mo, 1 50
* Schwarz's Longleaf Pine in Virgin Forest.....12mo, 1 25
Stockbridge's Rocks and Soils.....8vo, 2 50
Winton's Microscopy of Vegetable Foods.....8vo, 7 50
Woll's Handbook for Farmers and Dairymen.....16mo, 1 50

ARCHITECTURE.

Baldwin's Steam Heating for Buildings.....12mo, 2 50
Bashore's Sanitation of a Country House.....12mo, 1 00
Berg's Buildings and Structures of American Railroads.....4to, 5 00
Birkmire's Planning and Construction of American Theatres.....8vo, 3 00
Architectural Iron and Steel.....8vo, 3 50
Compound Riveted Girders as Applied in Buildings.....8vo, 2 00
Planning and Construction of High Office Buildings.....8vo, 3 50
Skeleton Construction in Buildings.....8vo, 3 00
Brigg's Modern American School Buildings.....8vo, 4 00
Carpenter's Heating and Ventilating of Buildings.....8vo, 4 00

Freitag's Architectural Engineering.....8vo. 3 50
Fireproofing of Steel Buildings.....8vo, 2 50
French and Ives's Stereotomy.....8vo, 2 50
Gerhard's Guide to Sanitary House-inspection.....16mo, 1 00
Sanitation of Public Buildings.....12mo, 1 50
Theatre Fires and Panics.....12mo, 1 50
*Greene's Structural Mechanics.....8vo, 2 50
Holly's Carpenters' and Joiners' Handbook.....18mo, 75
Johnson's Statics by Algebraic and Graphic Methods.....8vo, 2 00
Kellaway's How to Lay Out Suburban Home Grounds.....8vo, 2 00
Kidder's Architects' and Builders' Pocket-book. Rewritten Edition. 16mo, mor., 5 00
Merrill's Stones for Building and Decoration.....8vo, 5 00
Non-metallic Minerals: Their Occurrence and Uses.....8vo, 4 00
Monckton's Stair-building.....4to, 4 00
Patton's Practical Treatise on Foundations.....8vo, 5 00
Peabody's Naval Architecture.....8vo, 7 50
Rice's Concrete-block Manufacture.....8vo, 2 00
Richey's Handbook for Superintendents of Construction.....16mo, mor., 4 00
* Building Mechanics' Ready Reference Book:
* Carpenters' and Woodworkers' Edition.....16mo, morocco, 1 50
* Cementworkers and Plasterer's Edition. (In Press.)
* Stone- and Brick-mason's Edition.....12mo, mor., 1 50
Sabin's Industrial and Artistic Technology of Paints and Varnish.....8vo, 3 00
Siebert and Biggin's Modern Stone-cutting and Masonry.....8vo, 1 50
Snow's Principal Species of Wood.....8vo, 3 50
Sondericker's Graphic Statics with Applications to Trusses, Beams, and Arches. 8vo, 2 00
Towne's Locks and Builders' Hardware.....18mo, morocco, 3 00
Turneaure and Maurer's Principles of Reinforced Concrete Construction.....8vo, 3 00
Wait's Engineering and Architectural Jurisprudence.....8vo, 6 00
Sheep, 6 50
Law of Operations Preliminary to Construction in Engineering and Architecture.....8vo, 5 00
Sheep, 5 50
Law of Contracts.....8vo, 3 00
Wilson's Air Conditioning. (In Press.)
Wood's Rustless Coatings: Corrosion and Electrolysis of Iron and Steel..8vo, 4 00
Worcester and Atkinson's Small Hospitals, Establishment and Maintenance, Suggestions for Hospital Architecture, with Plans for a Small Hospital. 12mo, 1 25
The World's Columbian Exposition of 1893.....Large 4to, 1 00

ARMY AND NAVY.

Bernadou's Smokeless Powder, Nitro-cellulose, and the Theory of the Cellulose Molecule.....12mo, 2 50
Chase's Screw Propellers and Marine Propulsion.....8vo, 3 00
Cloke's Gunner's Examiner.....8vo, 1 50
Craig's Azimuth.....4to, 3 50
Crehore and Squier's Polarizing Photo-chronograph.....8vo, 3 00
* Davis's Elements of Law.....8vo, 2 50
* Treatise on the Military Law of United States.....8vo, 7 00
Sheep, 7 50
De Brack's Cavalry Outposts Duties. (Carr.).....24mo, morocco, 2 00
Dietz's Soldier's First Aid Handbook.....16mo, morocco, 1 25
* Dudley's Military Law and the Procedure of Courts-martial... Large 12mo, 2 50
Durand's Resistance and Propulsion of Ships.....8vo, 5 00

* Dyer's Handbook of Light Artillery.....12mo, 3 00
Eissler's Modern High Explosives.....8vo, 4 00
* Fiebeger's Text-book on Field Fortification.....Small 8vo, 2 00
Hamilton's The Gunner's Catechism.....18mo, 1 00
* Hoff's Elementary Naval Tactics.....8vo, 1 50
Ingalls's Handbook of Problems in Direct Fire.....8vo, 4 00
* Lissak's Ordnance and Gunnery.....8vo, 6 00
* Lyons's Treatise on Electromagnetic Phenomena. Vols. I. and II..8vo, each, 6 00
* Mahan's Permanent Fortifications. (Mercur.).....8vo, half morocco, 7 50
Manual for Courts-martial.....16mo, morocco, 1 50
* Mercur's Attack of Fortified Places.....12mo, 2 00
* Elements of the Art of War.....8vo, 4 00
Metcalf's Cost of Manufactures—And the Administration of Workshops..8vo, 5 00
* Ordnance and Gunnery. 2 vols.....12mo, 5 00
Murray's Infantry Drill Regulations.....18mo, paper, 10
Nixon's Adjutants' Manual.....24mo, 1 00
Peabody's Naval Architecture.....8vo, 7 50
* Phelps's Practical Marine Surveying.....8vo, 2 50
Powell's Army Officer's Examiner.....12mo, 4 00
Sharpe's Art of Subsisting Armies in War.....18mo, morocco, 1 50
* Tupes and Poole's Manual of Bayonet Exercises and Musketry Fencing. 24mo, leather, 50
Weaver's Military Explosives.....8vo, 3 00
Wheeler's Siege Operations and Military Mining.....8vo, 2 00
Winthrop's Abridgment of Military Law.....12mo, 2 50
Woodhull's Notes on Military Hygiene.....16mo, 1 50
Young's Simple Elements of Navigation.....16mo, morocco, 2 00

ASSAYING.

Fletcher's Practical Instructions in Quantitative Assaying with the Blowpipe. 12mo, morocco, 1 50
Furman's Manual of Practical Assaying.....8vo, 3 00
Lodge's Notes on Assaying and Metallurgical Laboratory Experiments....8vo, 3 00
Low's Technical Methods of Ore Analysis.....8vo, 3 00
Miller's Manual of Assaying.....12mo, 1 00
Cyanide Process.....12mo, 1 00
Minet's Production of Aluminum and its Industrial Use. (Waldo.).....12mo, 2 50
O'Driscoll's Notes on the Treatment of Gold Ores.....8vo, 2 00
Ricketts and Miller's Notes on Assaying.....8vo, 3 00
Robine and Lenglen's Cyanide Industry. (Le Clerc.).....8vo, 4 00
Ulke's Modern Electrolytic Copper Refining.....8vo, 3 00
Wilson's Cyanide Processes.....12mo, 1 50
Chlorination Process.....12mo, 1 50

ASTRONOMY.

Comstock's Field Astronomy for Engineers.....8vo, 2 50
Craig's Azimuth.....4to, 3 50
Crandall's Text-book on Geodesy and Least Squares.....8vo, 3 00
Doolittle's Treatise on Practical Astronomy.....8vo, 4 00
Gore's Elements of Geodesy.....8vo, 2 50
Hayford's Text-book of Geodetic Astronomy.....8vo, 3 00
Merriman's Elements of Precise Surveying and Geodesy.....8vo, 2 50
* Michie and Harlow's Practical Astronomy.....8vo, 3 00
* White's Elements of Theoretical and Descriptive Astronomy.....12mo, 2 00

BOTANY.

Davenport's Statistical Methods, with Special Reference to Biological Variation. 16mo, morocco, 1 25
Thomé and Bennett's Structural and Physiological Botany.....16mo, 2 25
Westermaier's Compendium of General Botany. (Schneider.).....8vo, 2 00

CHEMISTRY.

* Abegg's Theory of Electrolytic Dissociation. (Von Ende.).....12mo, 1 25
Adriance's Laboratory Calculations and Specific Gravity Tables.....12mo, 1 25
Alexeyeff's General Principles of Organic Synthesis. (Matthews.).....8vo, 3 00
Allen's Tables for Iron Analysis.....8vo, 3 00
Arnold's Compendium of Chemistry. (Mandel.).....Small 8vo, 3 50
Austen's Notes for Chemical Students.....12mo, 1 50
Beard's Mine Gases and Explosions. (In Press.)
Bernadou's Smokeless Powder.—Nitro-cellulose, and Theory of the Cellulose Molecule.....12mo, 2 50
Bolduan's Immune Sera.....12mo, 1 50
* Browning's Introduction to the Rarer Elements.....8vo, 1 50
Brush and Penfield's Manual of Determinative Mineralogy.....8vo, 4 00
* Claassen's Beet-sugar Manufacture. (Hall and Rolfe.).....8vo, 3 00
Classen's Quantitative Chemical Analysis by Electrolysis. (Boltwood.)..8vo, 3 00
Cohn's Indicators and Test-papers.....12mo, 2 00
Tests and Reagents.....8vo, 3 00
Crafts's Short Course in Qualitative Chemical Analysis. (Schaeffer.)...12mo, 1 50
* Danneel's Electrochemistry. (Merriam.).....12mo, 1 25
Dolezalek's Theory of the Lead Accumulator (Storage Battery). (Von Ende.).....12mo, 2 50
Drechsel's Chemical Reactions. (Merrill.).....12mo, 1 25
Duhem's Thermodynamics and Chemistry. (Burgess.).....8vo, 4 00
Eissler's Modern High Explosives.....8vo, 4 00
Effront's Enzymes and their Applications. (Prescott.).....8vo, 3 00
Erdmann's Introduction to Chemical Preparations. (Dunlap.).....12mo, 1 25
* Fischer's Physiology of Alimentation.....Large 12mo, 2 00
Fletcher's Practical Instructions in Quantitative Assaying with the Blowpipe. 12mo, morocco, 1 50
Fowler's Sewage Works Analyses.....12mo, 2 00
Fresenius's Manual of Qualitative Chemical Analysis. (Wells.).....8vo, 5 00
Manual of Qualitative Chemical Analysis. Part I. Descriptive. (Wells.) 8vo, 3 00
Quantitative Chemical Analysis. (Cohn.) 2 vols.....8vo, 12 50
Fuertes's Water and Public Health.....12mo, 1 50
Furman's Manual of Practical Assaying.....8vo, 3 00
* Getman's Exercises in Physical Chemistry.....12mo, 2 00
Gill's Gas and Fuel Analysis for Engineers.....12mo, 1 25
* Gooch and Browning's Outlines of Qualitative Chemical Analysis. Small 8vo, 1 25
Grotenfelt's Principles of Modern Dairy Practice. (Woll.).....12mo, 2 00
Groth's Introduction to Chemical Crystallography (Marshall).....12mo, 1 25
Hammarsten's Text-book of Physiological Chemistry. (Mandel.).....8vo, 4 00
Hanausek's Microscopy of Technical Products. (Winton.).....8vo, 5 00
* Haskin's and MacLeod's Organic Chemistry.....12mo, 2 00
Helm's Principles of Mathematical Chemistry. (Morgan.).....12mo, 1 50
Hering's Ready Reference Tables (Conversion Factors).....16mo, morocco, 2 50
Herrick's Denatured or Industrial Alcohol.....8vo, 4 00
Hind's Inorganic Chemistry.....8vo, 3 00
* Laboratory Manual for Students.....12mo, 1 00
Holleman's Text-book of Inorganic Chemistry. (Cooper.).....8vo, 2 50
Text-book of Organic Chemistry. (Walker and Mott.).....8vo, 2 50
* Laboratory Manual of Organic Chemistry. (Walker.).....12mo, 1 00

Holley and Ladd's Analysis of Mixed Paints, Color Pigments, and Varnishes. (In Press)
Hopkins's Oil-chemists' Handbook.....8vo, 3 00
Iddings's Rock Minerals.....8vo, 5 00
Jackson's Directions for Laboratory Work in Physiological Chemistry..8vo, 1 25
Johannsen's Key for the Determination of Rock-forming Minerals in Thin Sections. (In Press)
Keep's Cast Iron.....8vo, 2 50
Ladd's Manual of Quantitative Chemical Analysis.....12mo, 1 00
Landauer's Spectrum Analysis. (Tingle.).....8vo, 3 00
* Langworthy and Austen. The Occurrence of Aluminium in Vegetable Products, Animal Products, and Natural Waters.....8vo, 2 00
Lassar-Cohn's Application of Some General Reactions to Investigations in Organic Chemistry. (Tingle.).....12mo, 1 00
Leach's The Inspection and Analysis of Food with Special Reference to State Control.....8vo, 7 50
Löb's Electrochemistry of Organic Compounds. (Lorenz.).....8vo, 3 00
Lodge's Notes on Assaying and Metallurgical Laboratory Experiments....8vo, 3 00
Low's Technical Method of Ore Analysis.....8vo, 3 00
Lunge's Techno-chemical Analysis. (Cohn.).....12mo 1 00
* McKay and Larsen's Principles and Practice of Butter-making.....8vo, 1 50
Maire's Modern Pigments and their Vehicles. (In Press.)
Mandel's Handbook for Bio-chemical Laboratory.....12mo, 1 50
* Martin's Laboratory Guide to Qualitative Analysis with the Blowpipe..12mo, 60
Mason's Water-supply. (Considered Principally from a Sanitary Standpoint.) 3d Edition, Rewritten.....8vo, 4 00
Examination of Water. (Chemical and Bacteriological.).....12mo, 1 25
Matthew's The Textile Fibres. 2d Edition, Rewritten.....8vo, 4 00
Meyer's Determination of Radicles in Carbon Compounds. (Tingle.)..12mo, 1 00
Miller's Manual of Assaying.....12mo, 1 00
Cyanide Process.....12mo, 1 00
Minet's Production of Aluminum and its Industrial Use. (Waldo.)....12mo, 2 50
Mixter's Elementary Text-book of Chemistry.....12mo, 1 50
Morgan's An Outline of the Theory of Solutions and its Results.....12mo, 1 00
Elements of Physical Chemistry.....12mo, 3 00
* Physical Chemistry for Electrical Engineers.....12mo, 5 00
Morse's Calculations used in Cane-sugar Factories.....16mo, morocco, 1 50
* Muir's History of Chemical Theories and Laws.....8vo, 4 00
Mulliken's General Method for the Identification of Pure Organic Compounds. Vol. I.....Large 8vo, 5 00
O'Driscoll's Notes on the Treatment of Gold Ores.....8vo, 2 00
Ostwald's Conversations on Chemistry. Part One. (Ramsey.).....12mo, 1 50
" " " " Part Two. (Turnbull.).....12mo, 2 00
* Palmer's Practical Test Book of Chemistry.....12mo, 1 00
* Pauli's Physical Chemistry in the Service of Medicine. (Fischer.)....12mo, 1 25
* Penfield's Notes on Determinative Mineralogy and Record of Mineral Tests. 8vo, paper, 50
Pictet's The Alkaloids and their Chemical Constitution. (Biddle.).....8vo, 5 00
Pinner's Introduction to Organic Chemistry. (Austen.).....12mo, 1 50
Poole's Calorific Power of Fuels.....8vo, 3 00
Prescott and Winslow's Elements of Water Bacteriology, with Special Reference to Sanitary Water Analysis.....12mo, 1 25
* Reisig's Guide to Piece-dyeing.....8vo, 25 00
Richards and Woodman's Air, Water, and Food from a Sanitary Standpoint..8vo, 2 00
Ricketts and Miller's Notes on Assaying.....8vo, 3 00
Rideal's Sewage and the Bacterial Purification of Sewage.....8vo, 4 00
Disinfection and the Preservation of Food.....8vo, 4 00
Riggs's Elementary Manual for the Chemical Laboratory.....8vo, 1 25
Robine and Lenglen's Cyanide Industry. (Le Clerc.).....8vo, 4 00

Ruddiman's Incompatibilities in Prescriptions. 8vo, 2 00
* Whys in Pharmacy 12mo, 1 00
Sabin's Industrial and Artistic Technology of Paints and Varnish. 8vo, 3 00
Salkowski's Physiological and Pathological Chemistry. (Orndorff.). 8vo, 2 50
Schimpf's Text-book of Volumetric Analysis. 12mo, 2 50
Essentials of Volumetric Analysis. 12mo, 1 25
* Qualitative Chemical Analysis. 8vo, 1 25
Smith's Lecture Notes on Chemistry for Dental Students. 8vo, 2 50
Spencer's Handbook for Chemists of Beet-sugar Houses. . . . . 16mo, morocco 3 00
Handbook for Cane Sugar Manufacturers. . . . . 16mo, morocco. 3 00
Stockbridge's Rocks and Soils. 8vo, 2 50
* Tillman's Elementary Lessons in Heat. 8vo, 1 50
* Descriptive General Chemistry. 8vo, 3 00
Treadwell's Qualitative Analysis. (Hall.). 8vo, 3 00
Quantitative Analysis. (Hall.). 8vo, 4 00
Turneaure and Russell's Public Water-supplies. 8vo, 5 00
Van Deventer's Physical Chemistry for Beginners. (Boltwood.) 12mo, 1 50
* Walke's Lectures on Explosives. 8vo, 4 00
Ware's Beet-sugar Manufacture and Refining. Vol. I. . . . . Small 8vo, 4 00
" " " " " Vol. II. . . . . Small 8vo, 5 00
Washington's Manual of the Chemical Analysis of Rocks. 8vo, 2 00
Weaver's Military Explosives. 8vo, 3 00
Wehrenfennig's Analysis and Softening of Boiler Feed-Water 8vo, 4 00
Wells's Laboratory Guide in Qualitative Chemical Analysis. 8vo, 1 50
Short Course in Inorganic Qualitative Chemical Analysis for Engineering Students. 12mo, 1 50
Text-book of Chemical Arithmetic 12mo, 1 25
Whipple's Microscopy of Drinking-water. 8vo, 3 50
Wilson's Cyanide Processes 12mo, 1 50
Chlorination Process. 12mo, 1 50
Winton's Microscopy of Vegetable Foods 8vo, 7 50
Wulling's Elementary Course in Inorganic, Pharmaceutical, and Medical Chemistry. 12mo, 2 00

CIVIL ENGINEERING.

BRIDGES AND ROOFS. HYDRAULICS. MATERIALS OF ENGINEERING RAILWAY ENGINEERING.

Baker's Engineers' Surveying Instruments. 12mo, 3 00
Bixby's Graphical Computing Table. . . . . Paper 19½ × 24¼ inches. 25
Breed and Hosmer's Principles and Practice of Surveying 8vo, 3 00
* Burr's Ancient and Modern Engineering and the Isthmian Canal. 8vo, 3 50
Comstock's Field Astronomy for Engineers. 8vo, 2 50
* Corthell's Allowable Pressures on Deep Foundations. 12mo, 1 25
Crandall's Text-book on Geodesy and Least Squares 8vo, 3 00
Davis's Elevation and Stadia Tables. 8vo, 1 00
Elliott's Engineering for Land Drainage. 12mo, 1 50
Practical Farm Drainage. 12mo, 1 00
*Fiebeger's Treatise on Civil Engineering. 8vo, 5 00
Flemer's Phototopographic Methods and Instruments. 8vo, 5 00
Folwell's Sewerage. (Designing and Maintenance.). 8vo, 3 00
Freitag's Architectural Engineering. 2d Edition, Rewritten 8vo, 3 50
French and Ives's Stereotomy. 8vo, 2 50
Goodhue's Municipal Improvements. 12mo, 1 50
Gore's Elements of Geodesy. 8vo, 2 50
* Hauch and Rice's Tables of Quantities for Preliminary Estimates. 12mo, 1 25
Hayford's Text-book of Geodetic Astronomy. 8vo, 3 00

Hering's Ready Reference Tables (Conversion Factors). . . . . 16mo, morocco, 2 50
Howe's Retaining Walls for Earth. 12mo, 1 25
Hoyt and Grover's River Discharge. 8vo, 2 00
* Ives's Adjustments of the Engineer's Transit and Level. . . . . 16mo, Bds. 25
Ives and Hilts's Problems in Surveying. . . . . 16mo, morocco, 1 50
Johnson's (J. B.) Theory and Practice of Surveying. . . . . Small 8vo, 4 00
Johnson's (L. J.) Statics by Algebraic and Graphic Methods. 8vo, 2 00
Laplace's Philosophical Essay on Probabilities. (Truscott and Emory.). 12mo, 2 00
Mahan's Treatise on Civil Engineering. (1873.) (Wood.). 8vo, 5 00
* Descriptive Geometry. 8vo, 1 50
Merriman's Elements of Precise Surveying and Geodesy. 8vo, 2 50
Merriman and Brooks's Handbook for Surveyors. . . . . 16mo, morocco, 2 00
Nugent's Plane Surveying. 8vo, 3 50
Ogden's Sewer Design. 12mo, 2 00
Parsons's Disposal of Municipal Refuse. 8vo, 2 00
Patton's Treatise on Civil Engineering. . . . . 8vo half leather, 7 50
Reed's Topographical Drawing and Sketching 4to, 5 00
Rideal's Sewage and the Bacterial Purification of Sewage. 8vo, 4 00
Riemer's Shaft-sinking under Difficult Conditions. (Corning and Peele.). . 8vo, 3 00
Siebert and Biggin's Modern Stone-cutting and Masonry. 8vo, 1 50
Smith's Manual of Topographical Drawing. (McMillan.). 8vo, 2 50
Sondericker's Graphic Statics, with Applications to Trusses, Beams, and Arches. 8vo, 2 00
Taylor and Thompson's Treatise on Concrete, Plain and Reinforced. 8vo, 5 00
Tracy's Plane Surveying. . . . . 16mo, morocco, 3 00
* Trautwine's Civil Engineer's Pocket-book. . . . . 16mo, morocco, 5 00
Venable's Garbage Crematories in America. 8vo, 2 00
Wait's Engineering and Architectural Jurisprudence. 8vo, 6 00
Sheep, 6 50
Law of Operations Preliminary to Construction in Engineering and Architecture. 8vo, 5 00
Sheep, 5 50
Law of Contracts. 8vo, 3 00
Warren's Stereotomy—Problems in Stone-cutting. 8vo, 2 50
Webb's Problems in the Use and Adjustment of Engineering Instruments. 16mo, morocco, 1 25
Wilson's Topographic Surveying. 8vo, 3 50

BRIDGES AND ROOFS.

Boller's Practical Treatise on the Construction of Iron Highway Bridges. . 8vo, 2 00
Burr and Falk's Influence Lines for Bridge and Roof Computations. 8vo, 3 00
Design and Construction of Metallic Bridges 8vo, 5 00
Du Bois's Mechanics of Engineering. Vol. II. . . . . Small 4to, 10 00
Foster's Treatise on Wooden Trestle Bridges. 4to, 5 00
Fowler's Ordinary Foundations 8vo, 3 50
Greene's Roof Trusses. 8vo, 1 25
Bridge Trusses. 8vo, 2 50
Arches in Wood, Iron, and Stone. 8vo, 2 50
Grimm's Secondary Stresses in Bridge Trusses. (In Press.)
Howe's Treatise on Arches. 8vo, 4 00
Design of Simple Roof-trusses in Wood and Steel. 8vo, 2 00
Symmetrical Masonry Arches. 8vo, 2 50
Johnson, Bryan, and Turneaure's Theory and Practice in the Designing of Modern Framed Structures. . . . . Small 4to, 10 00
Merriman and Jacoby's Text-book on Roofs and Bridges:
Part I. Stresses in Simple Trusses. 8vo, 2 50
Part II. Graphic Statics. 8vo, 2 50
Part III. Bridge Design. 8vo, 2 50
Part IV. Higher Structures 8vo, 2 50

Morison's Memphis Bridge.....4to, 10 00
Waddell's De Pontibus, a Pocket-book for Bridge Engineers..16mo, morocco, 2 00
* Specifications for Steel Bridges.....12mo, 50
Wright's Designing of Draw-spans. Two parts in one volume.....8vo, 3 50

HYDRAULICS.

Barnes's Ice Formation.....8vo, 3 00
Bazin's Experiments upon the Contraction of the Liquid Vein Issuing from an Orifice. (Trautwine.).....8vo, 2 00
Bovey's Treatise on Hydraulics.....8vo, 5 00
Church's Mechanics of Engineering.....8vo, 6 00
Diagrams of Mean Velocity of Water in Open Channels.....paper, 1 50
Hydraulic Motors.....8vo, 2 00
Coffin's Graphical Solution of Hydraulic Problems.....16mo, morocco, 2 50
Flather's Dynamometers, and the Measurement of Power.....12mo, 3 00
Folwell's Water-supply Engineering.....8vo, 4 00
Frizell's Water-power.....8vo, 5 00
Fuertes's Water and Public Health.....12mo, 1 50
Water-filtration Works.....12mo, 2 50
Ganguillet and Kutter's General Formula for the Uniform Flow of Water in Rivers and Other Channels. (Hering and Trautwine.).....8vo, 4 00
Hazen's Clean Water and How to Get It.....Large 12mo, 1 50
Filtration of Public Water-supply.....8vo, 3 00
Hazlehurst's Towers and Tanks for Water-works.....8vo, 2 50
Herschel's 115 Experiments on the Carrying Capacity of Large, Riveted, Metal Conduits.....8vo, 2 00
* Hubbard and Kiersted's Water-works Management and Maintenance...8vo, 4 00
Mason's Water-supply. (Considered Principally from a Sanitary Standpoint.) 8vo, 4 00
Merriman's Treatise on Hydraulics.....8vo, 5 00
* Michie's Elements of Analytical Mechanics.....8vo, 4 00
Schuyler's Reservoirs for Irrigation, Water-power, and Domestic Water-supply.....Large 8vo, 5 00
* Thomas and Watt's Improvement of Rivers.....4to, 6 00
Turneaure and Russell's Public Water-supplies.....8vo, 5 00
Wegmann's Design and Construction of Dams. 5th Edition, enlarged...4to, 6 00
Water-supply of the City of New York from 1658 to 1895.....4to, 10 00
Whipple's Value of Pure Water.....Large 12mo, 1 00
Williams and Hazen's Hydraulic Tables.....8vo, 1 50
Wilson's Irrigation Engineering.....Small 8vo, 4 00
Wolff's Windmill as a Prime Mover.....8vo, 3 00
Wood's Turbines.....8vo, 2 50
Elements of Analytical Mechanics.....8vo, 3 00

MATERIALS OF ENGINEERING.

Baker's Treatise on Masonry Construction.....8vo, 5 00
Roads and Pavements.....8vo, 5 00
Black's United States Public Works.....Oblong 4to, 5 00
* Bovey's Strength of Materials and Theory of Structures.....8vo, 7 50
Burr's Elasticity and Resistance of the Materials of Engineering.....8vo, 7 50
Byrne's Highway Construction.....8vo, 5 00
Inspection of the Materials and Workmanship Employed in Construction. 16mo, 3 00
Church's Mechanics of Engineering.....8vo, 6 00
Du Bois's Mechanics of Engineering. Vol. I.....Small 4to, 7 50
*Eckel's Cements, Limes, and Plasters.....8vo, 6 00

Johnson's Materials of Construction.....Large 8vo, 6 00
Fowler's Ordinary Foundations.....8vo, 3 50
Graves's Forest Mensuration.....8vo, 4 00
* Greene's Structural Mechanics.....8vo, 2 50
Keep's Cast Iron.....8vo, 2 50
Lanza's Applied Mechanics.....8vo, 7 50
Martens's Handbook on Testing Materials. (Henning.) 2 vols.....8vo, 7 50
Maurer's Technical Mechanics.....8vo, 4 00
Merrill's Stones for Building and Decoration.....8vo, 5 00
Merriman's Mechanics of Materials.....8vo, 5 00
* Strength of Materials.....12mo, 1 00
Metcalf's Steel. A Manual for Steel-users.....12mo, 2 00
Patton's Practical Treatise on Foundations.....8vo, 5 00
Richardson's Modern Asphalt Pavements.....8vo, 3 00
Richey's Handbook for Superintendents of Construction.....16mo, mor., 4 00
* Ries's Clays: Their Occurrence, Properties, and Uses.....8vo, 5 00
Rockwell's Roads and Pavements in France.....12mo, 1 25
Sabin's Industrial and Artistic Technology of Paints and Varnish.....8vo, 3 00
* Schwarz's Longleaf Pine in Virgin Forest.....12mo, 1 25
Smith's Materials of Machines.....12mo, 1 00
Snow's Principal Species of Wood.....8vo, 3 50
Spalding's Hydraulic Cement.....12mo, 2 00
Text-book on Roads and Pavements.....12mo, 2 00
Taylor and Thompson's Treatise on Concrete, Plain and Reinforced.....8vo, 5 00
Thurston's Materials of Engineering. 3 Parts.....8vo, 8 00
Part I. Non-metallic Materials of Engineering and Metallurgy.....8vo, 2 00
Part II. Iron and Steel.....8vo, 3 50
Part III. A Treatise on Brasses, Bronzes, and Other Alloys and their Constituents.....8vo, 2 50
Tillson's Street Pavements and Paving Materials.....8vo, 4 00
Turneaure and Maurer's Principles of Reinforced Concrete Construction...8vo, 3 00
Waddell's De Pontibus. (A Pocket-book for Bridge Engineers.)..16mo, mor., 2 00
* Specifications for Steel Bridges.....12mo, 50
Wood's (De V.) Treatise on the Resistance of Materials, and an Appendix on the Preservation of Timber.....8vo, 2 00
Wood's (De V.) Elements of Analytical Mechanics.....8vo, 3 00
Wood's (M. P.) Rustless Coatings: Corrosion and Electrolysis of Iron and Steel.....8vo, 4 00

RAILWAY ENGINEERING.

Andrew's Handbook for Street Railway Engineers.....3x5 inches, morocco, 1 25
Berg's Buildings and Structures of American Railroads.....4to, 5 00
Brook's Handbook of Street Railroad Location.....16mo, morocco, 1 50
Butt's Civil Engineer's Field-book.....16mo, morocco, 2 50
Crandall's Transition Curve.....16mo, morocco, 1 50
Railway and Other Earthwork Tables.....8vo, 1 50
Crookett's Methods for Earthwork Computations. (In Press)
Dawson's "Engineering" and Electric Traction Pocket-book..16mo, morocco 5 00
Dredge's History of the Pennsylvania Railroad: (1879).....Paper, 5 00
Fisher's Table of Cubic Yards.....Cardboard, 25
Godwin's Railroad Engineers' Field-book and Explorers' Guide...16mo, mor., 2 50
Hudson's Tables for Calculating the Cubic Contents of Excavations and Embankments.....8vo, 1 00
Molitor and Beard's Manual for Resident Engineers.....16mo, 1 00
Nagle's Field Manual for Railroad Engineers.....16mo, morocco, 3 00
Philbrick's Field Manual for Engineers.....16mo, morocco, 3 00
Raymond's Elements of Railroad Engineering. (In Press.)

Searles's Field Engineering.....16mo, morocco, 3 00
Railroad Spiral.....16mo, morocco, 1 50
Taylor's Prismoidal Formulæ and Earthwork.....8vo, 1 50
* Trautwine's Method of Calculating the Cube Contents of Excavations and Embankments by the Aid of Diagrams.....8vo, 2 00
The Field Practice of Laying Out Circular Curves for Railroads. 12mo, morocco, 2 50
Cross-section Sheet.....Paper, 25
Webb's Railroad Construction.....16mo, morocco, 5 00
Economics of Railroad Construction.....Large 12mo, 2 50
Wellington's Economic Theory of the Location of Railways.....Small 8vo, 5 00

DRAWING.

Barr's Kinematics of Machinery.....8vo, 2 50
* Bartlett's Mechanical Drawing.....8vo, 3 00
* " " " Abridged Ed.....8vo, 1 50
Coolidge's Manual of Drawing.....8vo, paper, 1 00
Coolidge and Freeman's Elements of General Drafting for Mechanical Engineers.....Oblong 4to, 2 50
Durley's Kinematics of Machines.....8vo, 4 00
Emch's Introduction to Projective Geometry and its Applications.....8vo, 2 50
Hill's Text-book on Shades and Shadows, and Perspective.....8vo, 2 00
Jamison's Elements of Mechanical Drawing.....8vo, 2 50
Advanced Mechanical Drawing.....8vo, 2 00
Jones's Machine Design:
Part I. Kinematics of Machinery.....8vo, 1 50
Part II. Form, Strength, and Proportions of Parts.....8vo, 3 00
MacCord's Elements of Descriptive Geometry.....8vo, 3 00
Kinematics; or, Practical Mechanism.....8vo, 5 00
Mechanical Drawing.....4to, 4 00
Velocity Diagrams.....8vo, 1 50
MacLeod's Descriptive Geometry.....Small 8vo, 1 50
* Mahan's Descriptive Geometry and Stone-cutting.....8vo, 1 50
Industrial Drawing. (Thompson.).....8vo, 3 50
Moyer's Descriptive Geometry.....8vo, 2 00
Reed's Topographical Drawing and Sketching.....4to, 5 00
Reid's Course in Mechanical Drawing.....8vo, 2 00
Text-book of Mechanical Drawing and Elementary Machine Design.8vo, 3 00
Robinson's Principles of Mechanism.....8vo, 3 00
Schwamb and Merrill's Elements of Mechanism.....8vo, 3 00
Smith's (R. S.) Manual of Topographical Drawing. (McMillan.).....8vo, 2 50
Smith (A. W.) and Marx's Machine Design.....8vo, 3 00
* Titsworth's Elements of Mechanical Drawing.....Oblong 8vo, 1 25
Warren's Elements of Plane and Solid Free-hand Geometrical Drawing.12mo, 1 00
Drafting Instruments and Operations.....12mo, 1 25
Manual of Elementary Projection Drawing.....12mo, 1 50
Manual of Elementary Problems in the Linear Perspective of Form and Shadow.....12mo, 1 00
Plane Problems in Elementary Geometry.....12mo, 1 25
Elements of Descriptive Geometry, Shadows, and Perspective.....8vo, 3 50
General Problems of Shades and Shadows.....8vo, 3 00
Elements of Machine Construction and Drawing.....8vo, 7 50
Problems, Theorems, and Examples in Descriptive Geometry.....8vo, 2 50
Weisbach's Kinematics and Power of Transmission. (Hermann and Klein.).....8vo, 5 00
Whelpley's Practical Instruction in the Art of Letter Engraving.....12mo, 2 00
Wilson's (H. M.) Topographic Surveying.....8vo, 3 50

Wilson's (V. T.) Free-hand Perspective.....8vo, 2 50
Wilson's (V. T.) Free-hand Lettering.....8vo, 1 00
Woolf's Elementary Course in Descriptive Geometry.....Large 8vo, 3 00

ELECTRICITY AND PHYSICS.

* Abegg's Theory of Electrolytic Dissociation. (Von Ende.).....12mo, 1 25
Anthony and Brackett's Text-book of Physics. (Magie.).....Small 8vo, 3 00
Anthony's Lecture-notes on the Theory of Electrical Measurements....12mo, 1 00
Benjamin's History of Electricity.....8vo, 3 00
Voltaic Cell.....8vo, 3 00
Betts's Lead Refining and Electrolysis. (In Press.)
Classen's Quantitative Chemical Analysis by Electrolysis. (Boltwood.).8vo, 3 00
* Collins's Manual of Wireless Telegraphy.....12mo, 1 50
Morocco, 2 00
Crehore and Squier's Polarizing Photo-chronograph.....8vo, 3 00
* Danneel's Electrochemistry. (Merriam.).....12mo, 1 25
Dawson's "Engineering" and Electric Traction Pocket-book.16mo, morocco, 5 00
Dolezalek's Theory of the Lead Accumulator (Storage Battery). (Von Ende.)
12mo, 2 50
Duhem's Thermodynamics and Chemistry. (Burgess.).....8vo, 4 00
Flather's Dynamometers, and the Measurement of Power.....12mo, 3 00
Gilbert's De Magnete. (Mottelay.).....8vo, 2 50
Hanchett's Alternating Currents Explained.....12mo, 1 00
Hering's Ready Reference Tables (Conversion Factors).....16mo, morocco, 2 50
Hobart and Ellis's High-speed Dynamo Electric Machinery. (In Press.)
Holman's Precision of Measurements.....8vo, 2 00
Telescopic Mirror-scale Method, Adjustments, and Tests....Large 8vo, 75
Karapetoff's Experimental Electrical Engineering. (In Press.)
Kinzbrunner's Testing of Continuous-current Machines.....8vo, 2 00
Landauer's Spectrum Analysis. (Tingle.).....8vo, 3 00
Le Chatelier's High-temperature Measurements. (Boudouard—Burgess.) 12mo, 3 00
Löb's Electrochemistry of Organic Compounds. (Lorenz.).....8vo, 3 00
* Lyons's Treatise on Electromagnetic Phenomena. Vols. I. and II. 8vo, each, 6 00
* Michie's Elements of Wave Motion Relating to Sound and Light.....8vo, 4 00
Niaudet's Elementary Treatise on Electric Batteries. (Fishback.).....12mo, 2 50
Norris's Introduction to the Study of Electrical Engineering. (In Press.)
* Parshall and Hobart's Electric Machine Design.....4to, half morocco, 12 50
Reagan's Locomotives: Simple, Compound, and Electric. New Edition.
Large 12mo, 3 50
* Rosenberg's Electrical Engineering. (Haldane Gee—Kinzbrunner.)...8vo, 2 00
Ryan, Norris, and Hoxie's Electrical Machinery. Vol. I.....8vo, 2 50
Thurston's Stationary Steam-engines.....8vo, 2 50
* Tillman's Elementary Lessons in Heat.....8vo, 1 50
Tory and Pitcher's Manual of Laboratory Physics.....Small 8vo, 2 00
Ulke's Modern Electrolytic Copper Refining.....8vo, 3 00

LAW.

* Davis's Elements of Law.....8vo, 2 50
* Treatise on the Military Law of United States.....8vo, 7 00
* Sheep, 7 50
* Dudley's Military Law and the Procedure of Courts-martial....Large 12mo, 2 50
Manual for Courts-martial.....16mo, morocco, 1 50
Wait's Engineering and Architectural Jurisprudence.....8vo, 6 00
Sheep, 6 50
Law of Operations Preliminary to Construction in Engineering and Architecture.....8vo 5 00
Sheep, 5 50
Law of Contracts.....8vo, 3 00
Winthrop's Abridgment of Military Law.....12mo, 2 50

MANUFACTURES.

Bernadou's Smokeless Powder—Nitro-cellulose and Theory of the Cellulose Molecule 12mo, 2 50
Bolland's Iron Founder 12mo, 2 50
The Iron Founder," Supplement 12mo, 2 50
Encyclopedia of Founding and Dictionary of Foundry Terms Used in the Practice of Moulding 12mo, 3 00
* Claassen's Beet-sugar Manufacture. (Hall and Rolfe.) 8vo, 3 00
* Eckel's Cements, Limes, and Plasters 8vo, 6 00
Eissler's Modern High Explosives 8vo, 4 00
Effront's Enzymes and their Applications. (Prescott.) 8vo, 3 00
Fitzgerald's Boston Machinist 12mo, 1 00
Ford's Boiler Making for Boiler Makers 18mo, 1 00
Herrick's Denatured or Industrial Alcohol 8vo, 4 00
Holley and Ladd's Analysis of Mixed Paints, Color Pigments, and Varnishes. (In Press.)
Hopkins's Oil-chemists' Handbook 8vo, 3 00
Keep's Cast Iron 8vo, 2 50
Leach's The Inspection and Analysis of Food with Special Reference to State Control ..... Large 8vo, 7 50
* McKay and Larsen's Principles and Practice of Butter-making 8vo, 1 50
Maire's Modern Pigments and their Vehicles. (In Press.)
Matthews's The Textile Fibres. 2d Edition, Rewritten 8vo, 4 00
Metcalf's Steel. A Manual for Steel-users 12mo, 2 00
Metcalfe's Cost of Manufactures—And the Administration of Workshops 8vo, 5 00
Meyer's Modern Locomotive Construction 4to, 10 00
Morse's Calculations used in Cane-sugar Factories ..... 16mo, morocco, 1 50
* Reisig's Guide to Piece-dyeing 8vo, 25 00
Rice's Concrete-block Manufacture 8vo, 2 00
Sabin's Industrial and Artistic Technology of Paints and Varnish 8vo, 3 00
Smith's Press-working of Metals 8vo, 3 00
Spalding's Hydraulic Cement 12mo, 2 00
Spencer's Handbook for Chemists of Beet-sugar Houses ..... 16mo, morocco, 3 00
Handbook for Cane Sugar Manufacturers ..... 16mo, morocco, 3 00
Taylor and Thompson's Treatise on Concrete, Plain and Reinforced 8vo, 5 00
Thurston's Manual of Steam-boilers, their Designs, Construction and Operation 8vo, 5 00
Ware's Beet-sugar Manufacture and Refining. Vol. I ..... Small 8vo, 4 00
" " " " " Vol. II 8vo, 5 00
Weaver's Military Explosives 8vo, 3 00
West's American Foundry Practice 12mo, 2 50
Moulder's Text-book 12mo, 2 50
Wolff's Windmill as a Prime Mover 8vo, 3 00
Wood's Rustless Coatings: Corrosion and Electrolysis of Iron and Steel 8vo, 4 00

MATHEMATICS.

Baker's Elliptic Functions 8vo, 1 50
Briggs's Elements of Plane Analytic Geometry 12mo, 1 00
Buchanan's Plane and Spherical Trigonometry. (In Press.)
Compton's Manual of Logarithmic Computations 12mo, 1 50
Davis's Introduction to the Logic of Algebra 8vo, 1 50
* Dickson's College Algebra ..... Large 12mo, 1 50
* Introduction to the Theory of Algebraic Equations ..... Large 12mo, 1 25
Emch's Introduction to Projective Geometry and its Applications 8vo, 2 50
Halsted's Elements of Geometry 8vo, 1 75
Elementary Synthetic Geometry 8vo, 1 50
* Rational Geometry 12mo, 1 50

* Johnson's (J. B.) Three-place Logarithmic Tables: Vest-pocket size. paper, 15
100 copies for 5 00
* Mounted on heavy cardboard, 8 × 10 inches, 25
10 copies for 2 00
Johnson's (W. W.) Elementary Treatise on Differential Calculus..Small 8vo, 3 00
Elementary Treatise on the Integral Calculus.....Small 8vo, 1 50
Johnson's (W. W.) Curve Tracing in Cartesian Co-ordinates.....12mo, 1 00
Johnson's (W. W.) Treatise on Ordinary and Partial Differential Equations. Small 8vo, 3 50
Johnson's Treatise on the Integral Calculus.....Small 8vo, 3 00
Johnson's (W. W.) Theory of Errors and the Method of Least Squares.12mo, 1 50
* Johnson's (W. W.) Theoretical Mechanics.....12mo, 3 00
Laplace's Philosophical Essay on Probabilities. (Truscott and Emory.).12mo, 2 00
* Ludlow and Bass. Elements of Trigonometry and Logarithmic and Other Tables.....8vo, 3 00
Trigonometry and Tables published separately.....Each, 2 00
* Ludlow's Logarithmic and Trigonometric Tables.....8vo, 1 00
Manning's Irrational Numbers and their Representation by Sequences and Series 12mo, 1 25
Mathematical Monographs. Edited by Mansfield Merriman and Robert S. Woodward.....Octavo, each 1 00
No. 1. History of Modern Mathematics, by David Eugene Smith. No. 2. Synthetic Projective Geometry, by George Bruce Halsted. No. 3. Determinants, by Laenas Gifford Weld. No. 4. Hyperbolic Functions, by James McMahon. No. 5. Harmonic Functions, by William E. Byerly. No. 6. Grassmann's Space Analysis, by Edward W. Hyde. No. 7. Probability and Theory of Errors, by Robert S. Woodward. No. 8. Vector Analysis and Quaternions, by Alexander Macfarlane. No. 9. Differential Equations, by William Woolsey Johnson. No. 10. The Solution of Equations, by Mansfield Merriman. No. 11. Functions of a Complex Variable, by Thomas S. Fiske.
Maurer's Technical Mechanics.....8vo, 4 00
Merriman's Method of Least Squares.....8vo, 2 00
Rice and Johnson's Elementary Treatise on the Differential Calculus..Sm. 8vo, 3 00
Differential and Integral Calculus. 2 vols. in one.....Small 8vo, 3 50
* Veblen and Lennes's Introduction to the Real Infinitesimal Analysis of One Variable.....8vo, 2 00
Wood's Elements of Co-ordinate Geometry.....8vo, 2 00
Trigonometry: Analytical, Plane, and Spherical.....12mo, 1 00

MECHANICAL ENGINEERING.

MATERIALS OF ENGINEERING, STEAM-ENGINES AND BOILERS.

Bacon's Forge Practice.....12mo, 1 50
Baldwin's Steam Heating for Buildings.....12mo, 2 50
Barr's Kinematics of Machinery.....8vo, 2 50
* Bartlett's Mechanical Drawing.....8vo, 3 00
* " " " Abridged Ed.....8vo, 1 50
Benjamin's Wrinkles and Recipes.....12mo, 2 00
Carpenter's Experimental Engineering.....8vo, 6 00
Heating and Ventilating Buildings.....8vo, 4 00
Clerk's Gas and Oil Engine.....Small 8vo, 4 00
Coolidge's Manual of Drawing.....8vo, paper, 1 00
Coolidge and Freeman's Elements of General Drafting for Mechanical Engineers.....Oblong 4to, 2 50
Cromwell's Treatise on Toothed Gearing.....12mo, 1 50
Treatise on Belts and Pulleys.....12mo, 1 50

Durley's Kinematics of Machines.....8vo, 4 00
Flather's Dynamometers and the Measurement of Power.....12mo, 3 00
Rope Driving.....12mo, 2 00
Gill's Gas and Fuel Analysis for Engineers.....12mo, 1 25
Hall's Car Lubrication.....12mo, 1 00
Hering's Ready Reference Tables (Conversion Factors).....16mo, morocco, 2 50
Hutton's The Gas Engine.....8vo, 5 00
Jamison's Mechanical Drawing.....8vo, 2 50
Jones's Machine Design:
Part I. Kinematics of Machinery.....8vo, 1 50
Part II. Form, Strength, and Proportions of Parts.....8vo, 3 00
Kent's Mechanical Engineers' Pocket-book.....16mo, morocco, 5 00
Kerr's Power and Power Transmission.....8vo, 2 00
Leonard's Machine Shop, Tools, and Methods.....8vo, 4 00
* Lorenz's Modern Refrigerating Machinery. (Pope, Haven, and Dean.)..8vo, 4 00
MacCord's Kinematics; or, Practical Mechanism.....8vo, 5 00
Mechanical Drawing.....4to, 4 00
Velocity Diagrams.....8vo, 1 50
MacFarland's Standard Reduction Factors for Gases.....8vo, 1 50
Mahan's Industrial Drawing. (Thompson.).....8vo, 3 50
Poole's Calorific Power of Fuels.....8vo, 3 00
Reid's Course in Mechanical Drawing.....8vo, 2 00
Text-book of Mechanical Drawing and Elementary Machine Design.8vo, 3 00
Richard's Compressed Air.....12mo, 1 50
Robinson's Principles of Mechanism.....8vo, 3 00
Schwamb and Merrill's Elements of Mechanism.....8vo, 3 00
Smith's (O.) Press-working of Metals.....8vo, 3 00
Smith (A. W.) and Marx's Machine Design.....8vo, 3 00
Thurston's Treatise on Friction and Lost Work in Machinery and Mill Work.....8vo, 3 00
Animal as a Machine and Prime Motor, and the Laws of Energetics.12mo, 1 00
Tillson's Complete Automobile Instructor.....16mo, 1 50
Morocco, 2 00
Warren's Elements of Machine Construction and Drawing.....8vo, 7 50
Weisbach's Kinematics and the Power of Transmission. (Herrmann—Klein.).....8vo, 5 00
Machinery of Transmission and Governors. (Herrmann—Klein.)..8vo, 5 00
Wolff's Windmill as a Prime Mover.....8vo, 3 00
Wood's Turbines.....8vo, 2 50

MATERIALS OF ENGINEERING.

* Bovey's Strength of Materials and Theory of Structures.....8vo, 7 50
Burr's Elasticity and Resistance of the Materials of Engineering. 6th Edition. Reset.....8vo, 7 50
Church's Mechanics of Engineering.....8vo, 6 00
* Greene's Structural Mechanics.....8vo, 2 50
Johnson's Materials of Construction.....8vo, 6 00
Keep's Cast Iron.....8vo, 2 50
Lanza's Applied Mechanics.....8vo, 7 50
Martens's Handbook on Testing Materials. (Henning.).....8vo, 7 50
Maurer's Technical Mechanics.....8vo, 4 00
Merriman's Mechanics of Materials.....8vo, 5 00
* Strength of Materials.....12mo, 1 00
Metcalf's Steel. A Manual for Steel-users.....12mo, 2 00
Sabin's Industrial and Artistic Technology of Paints and Varnish.....8vo, 3 00
Smith's Materials of Machines.....12mo, 1 00
Thurston's Materials of Engineering.....3 vols., 8vo, 8 00
Part II. Iron and Steel.....8vo, 3 50
Part III. A Treatise on Brasses, Bronzes, and Other Alloys and their Constituents.....8vo, 2 50

Wood's (De V.) Treatise on the Resistance of Materials and an Appendix on the Preservation of Timber. 8vo, 2 00
Elements of Analytical Mechanics. 8vo, 3 00
Wood's (M. P.) Rustless Coatings: Corrosion and Electrolysis of Iron and Steel. 8vo, 4 00

STEAM-ENGINES AND BOILERS.

Berry's Temperature-entropy Diagram. 12mo, 1 25
Carnot's Reflections on the Motive Power of Heat. (Thurston.) 12mo, 1 50
Creighton's Steam-engine and other Heat-motors 8vo, 5 00
Dawson's "Engineering" and Electric Traction Pocket-book ....16mo, mor., 5 00
Ford's Boiler Making for Boiler Makers 18mo, 1 00
Goss's Locomotive Sparks 8vo, 2 00
Locomotive Performance 8vo, 5 00
Hemenway's Indicator Practice and Steam-engine Economy 12mo, 2 00
Hutton's Mechanical Engineering of Power Plants 8vo, 5 00
Heat and Heat-engines 8vo, 5 00
Kent's Steam boiler Economy 8vo, 4 00
Kneass's Practice and Theory of the Injector 8vo, 1 50
MacCord's Slide-valves 8vo, 2 00
Meyer's Modern Locomotive Construction 4to, 10 00
Peabody's Manual of the Steam-engine Indicator 12mo, 1 50
Tables of the Properties of Saturated Steam and Other Vapors 8vo, 1 00
Thermodynamics of the Steam-engine and Other Heat-engines 8vo, 5 00
Valve-gears for Steam-engines 8vo, 2 50
Peabody and Miller's Steam-boilers 8vo, 4 00
Pray's Twenty Years with the Indicator ....Large 8vo, 2 50
Pupin's Thermodynamics of Reversible Cycles in Gases and Saturated Vapors. (Osterberg.) 12mo, 1 25
Reagan's Locomotives: Simple, Compound, and Electric. New Edition. Large 12mo, 3 50
Sinclair's Locomotive Engine Running and Management 12mo, 2 00
Smart's Handbook of Engineering Laboratory Practice 12mo, 2 50
Snow's Steam-boiler Practice 8vo, 3 00
Spangler's Valve-gears 8vo, 2 50
Notes on Thermodynamics 12mo, 1 00
Spangler, Greene, and Marshall's Elements of Steam-engineering 8vo, 3 00
Thomas's Steam-turbines 8vo, 3 50
Thurston's Handy Tables 8vo, 1 50
Manual of the Steam-engine ....2 vols., 8vo, 10 00
Part I. History, Structure, and Theory 8vo, 6 00
Part II. Design, Construction, and Operation 8vo, 6 00
Handbook of Engine and Boiler Trials, and the Use of the Indicator and the Prony Brake 8vo, 5 00
Stationary Steam-engines 8vo, 2 50
Steam-boiler Explosions in Theory and in Practice 12mo, 1 50
Manual of Steam-boilers, their Designs, Construction, and Operation 8vo, 5 00
Wehrenfenning's Analysis and Softening of Boiler Feed-water (Patterson) 8vo, 4 00
Weisbach's Heat, Steam, and Steam-engines. (Du Bois.) 8vo, 5 00
Whitham's Steam-engine Design 8vo, 5 00
Wood's Thermodynamics, Heat Motors, and Refrigerating Machines 8vo, 4 00

MECHANICS AND MACHINERY.

Barr's Kinematics of Machinery 8vo, 2 50
* Bovey's Strength of Materials and Theory of Structures 8vo, 7 50
Chase's The Art of Pattern-making 12mo, 2 50

Church's Mechanics of Engineering.....8vo, 6 00
Notes and Examples in Mechanics.....8vo, 2 00
Compton's First Lessons in Metal-working.....12mo, 1 50
Compton and De Groodt's The Speed Lathe.....12mo, 1 50
Cromwell's Treatise on Toothed Gearing.....12mo, 1 50
Treatise on Belts and Pulleys.....12mo, 1 50
Dana's Text-book of Elementary Mechanics for Colleges and Schools..12mo, 1 50
Dingey's Machinery Pattern Making.....12mo, 2 00
Dredge's Record of the Transportation Exhibits Building of the World's Columbian Exposition of 1893.....4to half morocco, 5 00
Du Bois's Elementary Principles of Mechanics:
Vol. I. Kinematics.....8vo, 3 50
Vol. II. Statics.....8vo, 4 00
Mechanics of Engineering. Vol. I.....Small 4to, 7 50
Vol. II.....Small 4to, 10 00
Durley's Kinematics of Machines.....8vo, 4 00
Fitzgerald's Boston Machinist.....16mo, 1 00
Flather's Dynamometers, and the Measurement of Power.....12mo, 3 00
Rope Driving.....12mo, 2 00
Goss's Locomotive Sparks.....8vo, 2 00
Locomotive Performance.....8vo, 5 00
* Greene's Structural Mechanics.....8vo, 2 50
Hall's Car Lubrication.....12mo, 1 00
Hobart and Ellis's High-speed Dynamo Electric Machinery. (In Press.)
Holly's Art of Saw Filing.....18mo, 75
James's Kinematics of a Point and the Rational Mechanics of a Particle. Small 8vo, 2 00
* Johnson's (W. W.) Theoretical Mechanics.....12mo, 3 00
Johnson's (L. J.) Statics by Graphic and Algebraic Methods.....8vo, 2 00
Jones's Machine Design:
Part I. Kinematics of Machinery.....8vo, 1 50
Part II. Form, Strength, and Proportions of Parts.....8vo, 3 00
Kerr's Power and Power Transmission.....8vo, 2 00
Lanza's Applied Mechanics.....8vo, 7 50
Leonard's Machine Shop, Tools, and Methods.....8vo, 4 00
* Lorenz's Modern Refrigerating Machinery. (Pope, Haven, and Dean.).8vo, 4 00
MacCord's Kinematics; or, Practical Mechanism.....8vo, 5 00
Velocity Diagrams.....8vo, 1 50
* Martin's Text Book on Mechanics, Vol. I, Statics.....12mo, 1 25
* Vol. 2, Kinematics and Kinetics..12mo, 1 50
Maurer's Technical Mechanics.....8vo, 4 00
Merriman's Mechanics of Materials.....8vo, 5 00
* Elements of Mechanics.....12mo, 1 00
* Michie's Elements of Analytical Mechanics.....8vo, 4 00
* Parshall and Hobart's Electric Machine Design.....4to, half morocco, 12 50
Reagan's Locomotives: Simple, Compound, and Electric. New Edition. Large 12mo, 3 50
Reid's Course in Mechanical Drawing.....8vo, 2 00
Text-book of Mechanical Drawing and Elementary Machine Design.8vo, 3 00
Richards's Compressed Air.....12mo, 1 50
Robinson's Principles of Mechanism.....8vo, 3 00
Ryan, Norris, and Hoxie's Electrical Machinery. Vol. I.....8vo, 2 50
Sanborn's Mechanics: Problems.....Large 12mo, 1 50
Schwamb and Merrill's Elements of Mechanism.....8vo, 3 00
Sinclair's Locomotive-engine Running and Management.....12mo, 2 00
Smith's (O.) Press-working of Metals.....8vo, 3 00
Smith's (A. W.) Materials of Machines.....12mo, 1 00
Smith (A. W.) and Marx's Machine Design.....8vo, 3 00
Sorel's Carbureting and Combustion of Alcohol Engines. (Woodward and Preston.).....Large 8vo, 3 00

Spangler, Greene, and Marshall's Elements of Steam-engineering.....8vo, 3 00
Thurston's Treatise on Friction and Lost Work in Machinery and Mill Work.....8vo, 3 00
Animal as a Machine and Prime Motor, and the Laws of Energetics. 12mo, 1 00
Tillson's Complete Automobile Instructor.....16mo, 1 50
Morocco, 2 00
Warren's Elements of Machine Construction and Drawing.....8vo, 7 50
Weisbach's Kinematics and Power of Transmission. (Herrmann—Klein.).8vo, 5 00
Machinery of Transmission and Governors. (Herrmann—Klein.).8vo, 5 00
Wood's Elements of Analytical Mechanics.....8vo, 3 00
Principles of Elementary Mechanics.....12mo, 1 25
Turbines.....8vo, 2 50
The World's Columbian Exposition of 1893.....4to, 1 00

MEDICAL.

* Bolduan's Immune Sera.....12mo, 1 50
De Fursac's Manual of Psychiatry. (Rosanoff and Collins.).....Large 12mo, 2 50
Ehrlich's Collected Studies on Immunity. (Bolduan.).....8vo, 6 00
* Fischer's Physiology of Alimentation.....Large 12mo, cloth, 2 00
Hammarsten's Text-book on Physiological Chemistry. (Mandel.).....8vo, 4 00
Lassar-Cohn's Practical Urinary Analysis. (Lorenz.).....12mo, 1 00
* Pauli's Physical Chemistry in the Service of Medicine. (Fischer.)....12mo, 1 25
* Pozzi-Escot's The Toxins and Venoms and their Antibodies. (Cohn.).12mo, 1 00
Rostoski's Serum Diagnosis. (Bolduan.).....12mo, 1 00
Salkowski's Physiological and Pathological Chemistry. (Orndorff.).....8vo, 2 50
* Satterlee's Outlines of Human Embryology.....12mo, 1 25
Steel's Treatise on the Diseases of the Dog.....8vo, 3 50
Von Behring's Suppression of Tuberculosis. (Bolduan.).....12mo, 1 00
Woodhull's Notes on Military Hygiene.....16mo, 1 50
* Personal Hygiene.....12mo, 1 00
Wulling's An Elementary Course in Inorganic Pharmaceutical and Medical Chemistry.....12mo, 2 00

METALLURGY.

Betts's Lead Refining by Electrolysis. (In Press.)
Egleston's Metallurgy of Silver, Gold, and Mercury:
Vol. I. Silver.....8vo, 7 50
Vol. II. Gold and Mercury.....8vo, 7 50
Goesel's Minerals and Metals: A Reference Book.....16mo, mor. 3 00
* Iles's Lead-smelting.....12mo, 2 50
Keep's Cast Iron.....8vo, 2 50
Kunhardt's Practice of Ore Dressing in Europe.....8vo, 1 50
Le Chatelier's High-temperature Measurements. (Boudouard—Burgess.)12mo, 3 00
Metcalf's Steel. A Manual for Steel-users.....12mo, 2 00
Miller's Cyanide Process.....12mo, 1 00
Minet's Production of Aluminum and its Industrial Use. (Waldo.)....12mo, 2 50
Robine and Lenglen's Cyanide Industry. (Le Clerc.).....8vo, 4 00
Smith's Materials of Machines.....12mo, 1 00
Thurston's Materials of Engineering. In Three Parts.....8vo, 8 00
Part II. Iron and Steel.....8vo, 3 50
Part III. A Treatise on Brasses, Bronzes, and Other Alloys and their Constituents.....8vo, 2 50
Ulke's Modern Electrolytic Copper Refining.....8vo, 3 00

MINERALOGY.

Barringer's Description of Minerals of Commercial Value. Oblong, morocco, 2 50
Boyd's Resources of Southwest Virginia.....8vo, 3 00

Boyd's Map of Southwest Virignia.....Pocket-book form. 2 00
* Browning's Introduction to the Rarer Elements.....8vo, 1 50
Brush's Manual of Determinative Mineralogy. (Penfield.).....8vo, 4 00
Chester's Catalogue of Minerals.....8vo, paper, 1 00
Cloth, 1 25
Dictionary of the Names of Minerals.....8vo, 3 50
Dana's System of Mineralogy.....Large 8vo, half leather, 12 50
First Appendix to Dana's New "System of Mineralogy."....Large 8vo, 1 00
Text-book of Mineralogy.....8vo, 4 00
Minerals and How to Study Them.....12mo, 1 50
Catalogue of American Localities of Minerals.....Large 8vo, 1 00
Manual of Mineralogy and Petrography.....12mo 2 00
Douglas's Untechnical Addresses on Technical Subjects.....12mo, 1 00
Eakle's Mineral Tables.....8vo, 1 25
Egleston's Catalogue of Minerals and Synonyms.....8vo, 2 50
Goesel's Minerals and Metals: A Reference Book.....16mo, mor. 3 00
Groth's Introduction to Chemical Crystallography (Marshall)..... 12mo, 1 25
Iddings's Rock Minerals.....8vo, 5 00
Johannsen's Key for the Determination of Rock-forming Minerals in Thin Sections. (In Press.)
* Martin's Laboratory Guide to Qualitative Analysis with the Blowpipe.12mo, 60
Merrill's Non-metallic Minerals. Their Occurrence and Uses.....8vo, 4 00
Stones for Building and Decoration.....8vo, 5 00
* Penfield's Notes on Determinative Mineralogy and Record of Mineral Tests. 8vo, paper, 50
Tables of Minerals.....8vo, 1 00
* Richards's Synopsis of Mineral Characters.....12mo, morocco, 1 25
* Ries's Clays: Their Occurrence, Properties, and Uses.....8vo, 5 00
Rosenbusch's Microscopical Physiography of the Rock-making Minerals. (Iddings.).....8vo, 5 00
* Tillman's Text-book of Important Minerals and Rocks.....8vo, 2 00

MINING.

Beard's Mine Gases and Explosions. (In Press.)
Boyd's Resources of Southwest Virginia.....8vo, 3 00
Map of Southwest Virginia.....Pocket-book form, 2 00
Douglas's Untechnical Addresses on Technical Subjects.....12mo, 1 00
Eissler's Modern High Explosives.....8vo, 4 00
Goesel's Minerals and Metals: A Reference Book.....16mo, mor. 3 00
Goodyear's Coal-mines of the Western Coast of the United States.....12mo, 2 50
Ihlseng's Manual of Mining.....8vo, 5 00
* Iles's Lead-smelting.....12mo, 2 50
Kunhardt's Practice of Ore Dressing in Europe.....8vo, 1 50
Miller's Cyanide Process.....12mo, 1 00
O'Driscoll's Notes on the Treatment of Gold Ores.....8vo, 2 00
Robine and Lenglen's Cyanide Industry. (Le Clerc.).....8vo, 4 00
Weaver's Military Explosives.....8vo, 3 00
Wilson's Cyanide Processes.....12mo, 1 50
Chlorination Process.....12mo, 1 50
Hydraulic and Placer Mining. 2d edition, rewritten.....12mo, 2 50
Treatise on Practical and Theoretical Mine Ventilation.....12mo, 1 25

SANITARY SCIENCE.

Bashore's Sanitation of a Country House.....12mo, 1 00
* Outlines of Practical Sanitation.....12mo, 1 25
Folwell's Sewerage. (Designing, Construction, and Maintenance.).....8vo, 3 00
Water-supply Engineering.....8vo, 4 00

Fowler's Sewage Works Analyses.....12mo, 2 00
Fuertes's Water and Public Health.....12mo, 1 50
Water-filtration Works.....12mo, 2 50
Gerhard's Guide to Sanitary House-inspection.....16mo, 1 00
Sanitation of Public Buildings.....12mo, 1 50
Hazen's Filtration of Public Water-supplies.....8vo, 3 00
Leach's The Inspection and Analysis of Food with Special Reference to State Control.....8vo, 7 50
Mason's Water-supply. (Considered principally from a Sanitary Standpoint) 8vo, 4 00
Examination of Water. (Chemical and Bacteriological.).....12mo, 1 25
* Merriman's Elements of Sanitary Engineering.....8vo, 2 00
Ogden's Sewer Design.....12mo, 2 00
Prescott and Winslow's Elements of Water Bacteriology, with Special Reference to Sanitary Water Analysis.....12mo, 1 25
* Price's Handbook on Sanitation.....12mo, 1 50
Richards's Cost of Food. A Study in Dietaries.....12mo, 1 00
Cost of Living as Modified by Sanitary Science.....12mo, 1 00
Cost of Shelter.....12mo, 1 00
Richards and Woodman's Air, Water, and Food from a Sanitary Standpoint.....8vo, 2 00
* Richards and Williams's The Dietary Computer.....8vo, 1 50
Rideal's Sewage and Bacterial Purification of Sewage.....8vo, 4 00
Disinfection and the Preservation of Food.....8vo, 4 00
Turneaure and Russell's Public Water-supplies.....8vo, 5 00
Von Behring's Suppression of Tuberculosis. (Bolduan.).....12mo, 1 00
Whipple's Microscopy of Drinking-water.....8vo, 3 50
Wilson's Air Conditioning. (In Press.)
Winton's Microscopy of Vegetable Foods.....8vo, 7 50
Woodhull's Notes on Military Hygiene.....16mo, 1 50
* Personal Hygiene.....12mo, 1 00

MISCELLANEOUS.

Association of State and National Food and Dairy Departments (Interstate Pure Food Commission):
Tenth Annual Convention Held at Hartford, July 17–20, 1906.....8vo, 3 00
Eleventh Annual Convention, Held at Jamestown Tri-Centennial Exposition, July 16–19, 1907. (In Press.)
Emmons's Geological Guide-book of the Rocky Mountain Excursion of the International Congress of Geologists.....Large 8vo, 1 50
Ferrel's Popular Treatise on the Winds.....8vo, 4 00
Gannett's Statistical Abstract of the World.....24mo, 75
Gerhard's The Modern Bath and Bath-houses. (In Press.)
Haines's American Railway Management.....12mo, 2 50
Ricketts's History of Rensselaer Polytechnic Institute, 1824–1894..Small 8vo, 3 00
Rotherham's Emphasized New Testament.....Large 8vo, 2 00
Standage's Decorative Treatment of Wood, Glass, Metal, etc. (In Press.)
The World's Columbian Exposition of 1893.....4to, 1 00
Winslow's Elements of Applied Microscopy.....12mo, 1 50

HEBREW AND CHALDEE TEXT-BOOKS.

Green's Elementary Hebrew Grammar.....12mo, 1 25
Hebrew Chrestomathy.....8vo, 2 00
Gesenius's Hebrew and Chaldee Lexicon to the Old Testament Scriptures. (Tregelles.).....Small 4to, half morocco 5 00
Letteris's Hebrew Bible.....8vo, 2 25

Jgrl
Uso S

889 117
b8908890 117a